1.2.51.32.22634-000

Conventional Smoke Detector

User's Manual

V1.0.2

ZHEJIANG HUAXIAO TECHNOLOGY CO.,LTD.

Address: Area A, Floor 3, Building C, No.28 Dongqiao Road, Dongzhou Sub-district, Fuyang District, Hangzhou City, Zhejiang Province, China

Website: www.wisualarm.com/en/home

Foreword

General

This manual introduces the functions and operations of the Conventional Smoke Detector (hereinafter referred to as "the Device").

Safety Instructions

The following categorized signal words with defined meaning might appear in the manual.

Signal Words	Meaning
DANGER	Indicates a high potential hazard which, if not avoided, will result in death or serious injury.
WARNING	Indicates a medium or low potential hazard which, if not avoided, could result in slight or moderate injury.
CAUTION	Indicates a potential risk which, if not avoided, could result in property damage, data loss, lower performance, or unpredictable result.
TIPS	Provides methods to help you solve a problem or save you time.
NOTE	Provides additional information as the emphasis and supplement to the text.

About the Manual

- The manual is for reference only. If there is inconsistency between the manual and the actual product, the actual product shall prevail.
- We are not liable for any loss caused by the operations that do not comply with the manual.
- The manual would be updated according to the latest laws and regulations of related jurisdictions. For detailed information, refer to the paper manual, CD-ROM, QR code or our official website. If there is inconsistency between paper manual and the electronic version, the electronic version shall prevail.
- All the designs and software are subject to change without prior written notice. The product updates might cause some differences between the actual product and the manual. Please contact the customer service for the latest program and supplementary documentation.
- There still might be deviation in technical data, functions and operations description, or errors in print. If there is any doubt or dispute, we reserve the right of final explanation.
- Upgrade the reader software or try other mainstream reader software if the manual (in PDF format) cannot be opened.
- All trademarks, registered trademarks and the company names in the manual are the properties of their respective owners.
- Please visit our website, contact the supplier or customer service if there is any problem occurring when using the device.
- If there is any uncertainty or controversy, we reserve the right of final explanation.

Important Safeguards and Warnings

This section introduces content covering the proper handling of the device, hazard prevention, and prevention of property damage. Read carefully before using the device, comply with the guidelines when using it, and keep the manual safe for future reference.

Operation Requirements

- Make sure that the power supply of the device works properly before use.
- Transport, use and store the device under allowed humidity and temperature conditions.
- Prevent liquids from splashing or dripping on the device. Make sure that there are no objects filled with liquid on top of the device to avoid liquids flowing into it.
- Do not disassemble the device.

Installation Requirements

WARNING

- Strictly abide by local electrical safety standards, and make sure that the voltage in the area is steady and conforms to the power requirements of the device.
- Do not connect the device to more than one power supply. Otherwise, the device might become damaged.

- Observe all safety procedures and wear required protective equipment provided for your use while working at heights.
- Do not expose the device to direct sunlight or heat sources.
- Do not install the device in humid, dusty or smoky places.
- Install the device in a well-ventilated place, and do not block the ventilator of the device.

Maintenance Requirements

- Use the accessories suggested by the manufacturer. Installation and maintenance must be performed by qualified professionals.
- Clean the device with a soft dry cloth or a clean soft cloth dipped in neutral detergent.
- Contact your local dealer or the service center nearest to you if the device needs internal configuration or maintenance. Do not dismantle or modify the device without a qualified professional present to avoid the risk of danger or damage to the device. We will assume no responsibility for any problems caused by unauthorized modifications or maintenance.

1 Product Information

1.1 Introduction

DHI-HY-C131 Conventional Smoke Detector is a mated product of the Conventional Fire Alarm Control Panel. Integrated with two-wire and polarity-free technology, this detector analyzes ambient smoke concentration through a dual photoelectric smoke sensing chamber.

It is suitable for apartments, hotels, teaching buildings, office buildings, banks, libraries, warehouses, computer rooms, communication machine rooms, archives, and other industrial and civil buildings.

1.2 Features

- Convenient wiring: Two-wire, polarity-free
- Reliable communication: Completes EMC test, it has strong anti-electromagnetic interference ability, high stability and reliability
- Precise detection: Dual photoelectric smoking sensing chamber provides intelligent and accurate detection of smoke
- Backlight compensation: Automatic compensation algorithm helps prolong cleaning cycle of chamber and offer a convenient maintenance
- Flexible installation: Non-loosening screws on base terminal for easy installation
- High endurance: Contacts material is highly acid-resistant and rust-resistant

1.3 Dimension

Figure 1-1 Dimension [mm (inch)]

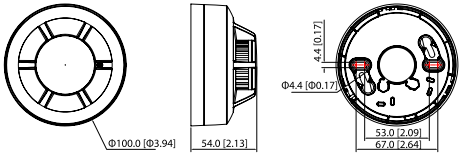

2 Technical Information

Parameter	Introduction
Electrical	
Working Voltage	24V DC nominal, range from 16V DC to 28V DC
Rated Power	9.816mW
Current	• Standby current: ≤ 350μA • Maximum operating current: ≤ 350μA
Indicator	Red LED • Polling: Flash 6 seconds • Alarm: Remain lit • Fault: Flash 2 seconds
Communication Wiring	
Wiring	Two-wire, polarity-free
Environment	
Operating Temperature	–10°C to +55°C (+14°F to +131°F)
Storage Temperature	–20°C to +65°C (–4°F to +149°F)
Operating Humidity	≤ 95% RH (no condensation)
Construction	
Color	White
Dimensions (with base)	Φ100 mm × 54 mm (Φ 3.94" × 2.13")
Weight (with base)	102 g (0.22 lb)
Certification	EN 54-7:2018/A1:2021

3 Device Installation

3.1 Packing List

Check the quantity and model. If you find device damage or any loss, contact the after-sales service.

3.2 Installation Steps

Prerequisites

- Determine the location, mounting height and numbers for mounting the device in the protection area according to the construction drawing and relevant regulations.
- Before installation, an insulation test is necessarily required. The insulation resistance between the buses should be greater than 20KΩ, and the insulation resistance of the bus to the ground should be greater than 20MΩ. It is strictly forbidden to use a megger to test the insulation resistance after completing installation.
- Disconnect the power supply of the device before installation. Ensure the correct wiring and firm connection.
- Use RVS twisted pairs with a section area of 1.5 mm^2 or 1.0 mm^2 for the signal buses.
- Do not install smoke detector here:
  - ◇ Kitchens, boiler rooms, and other damp areas.
  - ◇ Dusty areas or places attract inserts.
  - ◇ Next to air conditioner, fan, air vent or other similar ventilation openings.
  - ◇ Near obstructed areas.

Procedure

Step 1 Use two M4 screws to fix the device base on the embedded box or designated position, and make sure the matched mounting base has been firmly installed.

Figure 3-1 Installation (1)

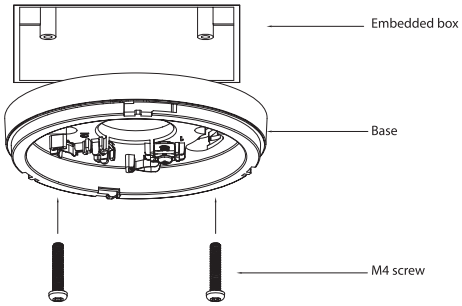

Step 2 Wiring the base. Connect terminals and fix on the base.

1, 2: Access terminal for the bus signal, polarity-free.

Figure 3-2 Mounting base

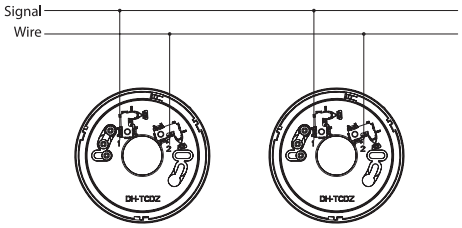

Figure 3-3 Installation (2)

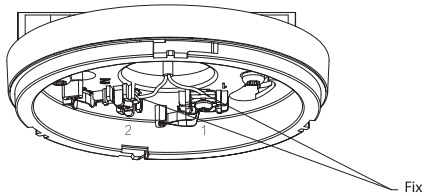

Step 3 Mount the device into the base by aligning them together and twisting the unit clockwise until it is firmly locked.

Figure 3-4 Installation (3)

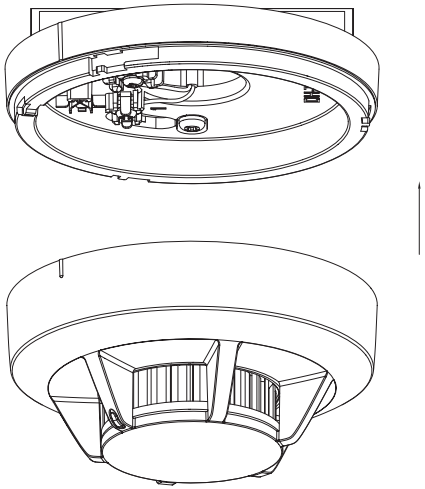

Figure 3-5 Installation (4)

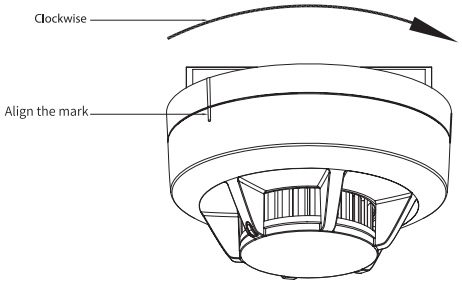

Step 4 After all devices are installed and checked, connect the power supply of the Conventional Fire Alarm Control Panel. The equipment shall be powered by a limited power source or PS2 circuit.

4 FAQ

Problem	Solutions
The indicator light of the detector does not light up	Check whether the device is installed in place; if it is installed correctly, check the circuit, measure and ensure that the voltage of the equipment signal line is between BUS 16V and BUS 28V
The indicator light of the detector is constantly on, and Conventional Fire Alarm Control Panel reports a false fire alarm	Check whether there are interference sources such as steam and dust near the device
The indicator light of the detector flashes quickly, and the screen of Conventional Fire Alarm Control Panel displays “Failure”	Due to corrosion, drop, violent impact, etc., the sensor has a short circuit or open circuit failure, please contact the professionals

5 Test and Maintenance

5.1 Test

- After installation and register, test the detector by using a smoke blowing. When ambient smoke concentration reaches the alarm threshold, the indicator will turn to steady lighting and Fire Alarm Control Panel will simultaneously give alarm information.
- After completing the alarm test, reset the Fire Alarm Control Panel and restore to the normal operation.

5.2 Maintenance

To keep your device in good working condition, please follow these requirements.

- Simulate alarm test: Test the device once half a year (recommended).
- Before testing or maintaining, inform the proper authorities that the system is undergoing maintenance and will temporarily be put out of service.