Camara HDCVI

User manual



V1.0.0

Foreword

General

This manual explains the functions and uses of the HDCVI camera (hereinafter referred to as "the device").

Security instructions

The following classified signal words with defined meaning may appear in the manual.

signal words	Meaning
 DANGER	Indicates a highly potential hazard which, if not avoided, will result in death or serious injury.
 CAVEAT	Indicates a low or medium potential hazard which, if not avoided, could result in minor or moderate injury.
 CAUTION	Indicates a potential hazard which, if not avoided, could result in property damage, data loss, poor performance, or other unpredictable results.
 TIPS	Provides methods to help you solve a problem or save time.
 NOTE	Provides additional information as an emphasis or complement to the text.

revision history

Version	Review content	Publication date
V1.0.0	First launch.	June 2020

About the manual

- The manual is just a reference. If you find any discrepancy between the manual and the actual product, the actual product shall prevail.
- We will not accept any responsibility for any losses caused by using the device without following the instructions in the manual.
- The manual will be updated in accordance with the latest laws and regulations of related jurisdictions. For more information, see the printed manual,
  the CD-ROM, the QR code or our official website. In the event of a discrepancy between the printed manual and the electronic version, the electronic version shall prevail.
  electronic version.
- All designs and software contained herein are subject to change without prior written notice. Product updates may cause discrepancies between the actual product and the manual. Contact customer service requesting the updated program and supplemental documentation.

- Still there might be some deviation in technical data, functions and description of operations, or printing errors. If there is any doubt or dispute,
  we reserve the right of final explanation.
- Please update the reader software or try other mainstream reader software in case you cannot open the manual (in PDF format).
- All trademarks, registered trademarks and company names in the manual belong to their respective owners.
- Please visit our website, contact the supplier or customer service if any problem occurs during the use of the device.
- If there are uncertainties or disputes, we reserve the right of final explanation.

Safety warnings and precautions important

⚠

electrical safety

- All instructions for use and installation must be carried out in accordance with the electrical safety regulations of your country.
- The power supply must meet the requirements of the SELV standard (Safety Low Voltage) and supply power with the rated voltage, which meets the requirements of limited power supply according to the ICE62368-1 standard. Power supply requirements are indicated on the device label. It is necessary to incorporate an
- easily accessible disconnect device in the wiring of the building installation.

- Make sure the power adapter meets the device's operating voltage requirements before turning it on (the material and length of the power cord may affect the device's voltage).

- Do not allow the power cord to be pinched or pinched, especially at the connector, power outlet, and the junction point coming out of the device.
- We assume no responsibility for fire and electric shock caused by improper handling or installation.

Operating requirements

- Do not point the device at strong light, such as lamplight and sunlight. Transport, use
- and store the device within the permitted limits of humidity and temperature.

- Keep the device away from water or other liquids to avoid damage to internal components.
- Maintain good ventilation to prevent heat build-up.
- Do not subject the unit to strong pressure, strong vibration, or splashing water during transportation, storage, and installation.
- When transporting the device, keep it in the factory packaging or use equivalent materials.
- It is recommended to use this device with a lightning rod to improve lightning protection.
- It is recommended to ground the device to improve reliability.
- It is recommended to use a qualified video transmission cable to improve video quality and use a standard RG59 or higher coaxial cable.

CAVEAT

- Please use components or accessories supplied by the manufacturer and ensure that professional engineers perform the installation and maintenance of the device.
- The image sensor surface should not be exposed to laser beam radiation in an environment where a laser beam device is used.
- Do not supply two or more power supplies for the device; otherwise it may damage the device.
- If PoC power is used, please do not connect other device between the device and PoC transceiver, including UTC, Balun, optical transceiver, distributor, converter, etc.; Otherwise, the device may be burned.
- The PoC supply voltage is up to 52V. Do not disassemble the device during normal operation; Otherwise, it may endanger both the device and users due to high voltage.

Index of contents

Foreword..... II

Important Safety Warnings and Precautions ..... IV 1

Overview 8

1.1 Introduction 8

1.2 App..... 8

1.3 Transmission distance..... 9

2 Wire connection..... 10

2.1 Power outlet..... 10

2.2 12 VDC power input port..... 10

2.3 24 VAC power input port 10

2.4 Video out port ....eleven

2.5 Audio input port..... eleven

2.6 Alarm output port ..... eleven

2.7 DIP switch 12

2.8 HD/SD control cable..... 12

2.9 HDCVI Aviation Connector 12

3 Configuration and general use 14

3.1 Accessing the main menu of the XVR..... 14

3.2 Audio input setting 14

3.3 Operate the PTZ control panel..... 16

3.3.1 OSD operation menu 16

3.3.2 Using autofocus (AF)..... 17

4 Camera smart light settings 19

4.1 Activate/Deactivate the smart light 19

4.2 Configuring smart light settings 19

5 Setting up the temperature and humidity chamber..... .....twenty-one

5.1 Activate/Deactivate temperature and humidity ....twenty-one

5.2 Setting the temperature measurement mode ....twenty-one

5.3 Setting the temperature and humidity display..... .....twenty-one

5.4 View the temperature and humidity..... 22

6 Activate the warning camera setting 2. 3

6.1 Detection range of the PIR detector 2. 3

6.2 Set the activation mode..... .....2. 3

6.3 Setting the audible alarm and light warning 24

7 Input Camera Settings 25

7.2 Connect node devices in the OSD menu..... 25

7.3 Connect node devices to the XVR..... 25

8 Box camera installation..... 28

8.1 Lens installation 28

8.1.1 Install the type 1 lens 28

8.1.2 Installing the type 2 lens 29

8.2 I/O port installation 30

8.2.1 Cable connection..... 30

8.2.2 Removing the cable 30

8.3 Device installation 31
9 Fisheye camera settings..... 33
9.1 Fisheye dewarping in the live interface 33
9.2 Fisheye dewarping during playback 3. 4
10 Frequently asked questions..... 36
10.1 PoC power supply..... 36
10.2 Long-distance feeding 36
10.3 Centralized power supply 37
10.4 Connector water protection 37
11 Maintenance 39

1 Overview

1.1 Introduction

The device is HDCVI compliant and supports video transmission and signal control over coaxial cable. The device produces video signal with megapixel resolution and should be connected to XVR to achieve high speed, long distance and no delay in signal transmission. It can be applied in different scenarios, such as highways, warehouses, underground parking lots, bars, pipelines, and gas stations.

1.2 App

Figure 1-1 Application scenarios

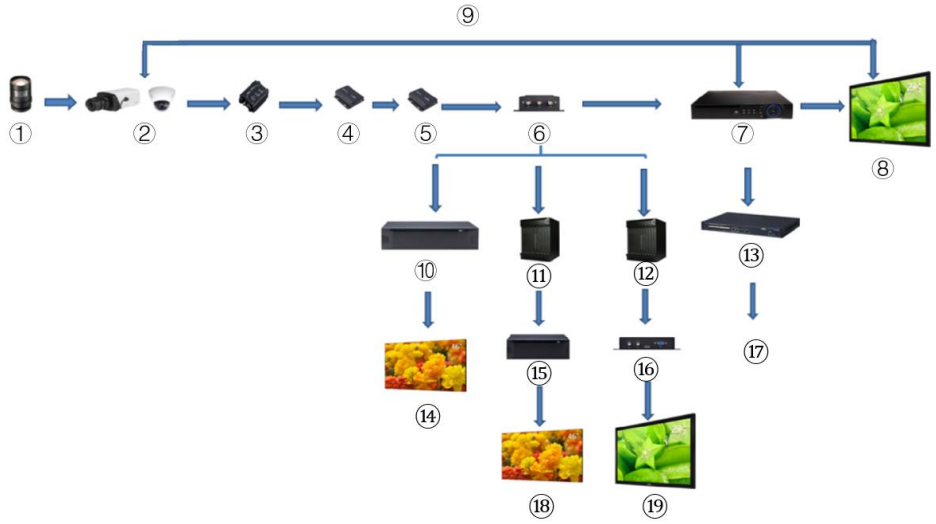

Table 1-1 Application scenarios

No.	Name	No.	Name	No.	Name
1	(Optional) Lens	8	Screen	fifteen	Divider
two	HDCVI Products	9	Direct connection	16	Converter
3	(Optional) Device protection against surges	10	Platform of integrated video	17	Ethernet
4	(Optional) Transceiver optical (shipping)	eleven	Matrix	18	Screen divided
5	(Optional) Transceiver optical (receive)	12	Matrix	19	Screen
6	(Optional) Distributor	13	switch	—	—
7	HCVR Products	14	split screen	—	—

1.3 transmission distance

Table 1-2 Transmission distance

Cable		720p	1080p	4MP/4K
Coaxial cable	RG6 (75-5)	1200m	800m	700m
	RG59 (75-3)	800m	500m	500m
UTP	CAT6	450m	300m	300m

Table 1-3 Transmission distance of PoC HDCVI enabled by PoC XVR

PoC XVR Series	PoC mode	RG59	RG6
Complete series	AT	100m	100m
	AF	200m	200m

2 Wire connection

Cable types may vary by camera and actual product shall prevail.

2.1 power outlet

Supplies 12 VDC power.

- Check that the power consumption of the devices connected to this port is less than 2W
- Make sure that the supply frequency of the devices connected to this port is greater than 1 MHz, such as sound capture, temperature / humidity sensor and other devices without changing power consumption. There could be flickering in the image if you connect this port to devices with a power frequency less than 1MHz, such as fan, room sensor, speaker, motor and other electromechanical devices with changing energy consumption.

Figure 2-1 power outlet

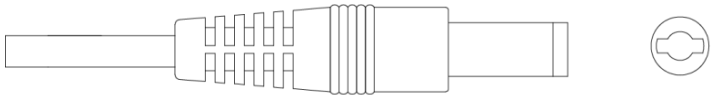

2.2 12 VDC power input port

12V DC inputs.

There might be abnormality or damage to the device if the power is not supplied properly to the 12 VDC power input port. Check that the supply electrical corresponds to what is indicated in the manual.

Figure 2-2 12 VDC power input port

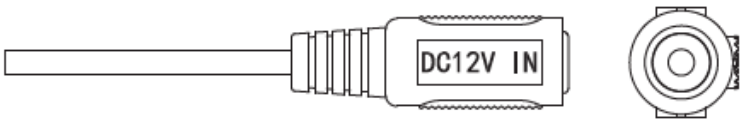

2.3 24 VAC power input port

Supplies 24 VAC power.

⚠

Abnormality or damage to the device may occur if the power is not supplied correctly. Be sure to supply power as indicated in the manual.

Figure 2-3 24 VAC power input port

2.4 video out port

Connect the XVR to a video output signal.

⚠ **CAVEAT**

- When the device is in PoC power mode, please do not connect another device between device and PoC XVR or PoC transceiver, including UTC, Balun, optical transceiver, distributor, converter, etc.; Otherwise, the device could burn.
- The PoC power supply has high voltage. Do not disassemble the device during normal functioning; Otherwise, it could endanger both the device and users due to high voltage.

Figure 2-4 video out port

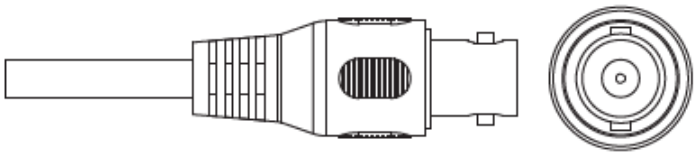

2.5 audio input port

Connects to sound capture devices to receive analog audio signal.

Figure 2-5 audio input port

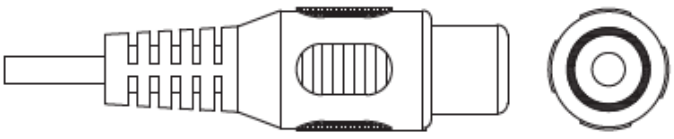

2.6 alarm output port

It connects to external alarm devices, such as sirens, to trigger an alarm.

Figure 2-6 alarm output port

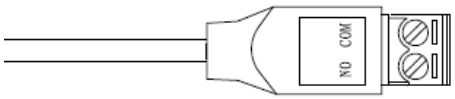

2.7 DIP switch

The DIP switch changes to modify the output mode. Pull up the switch sets "ON",

and lowering it indicates "OFF".

Figure 2-7 DIP switch

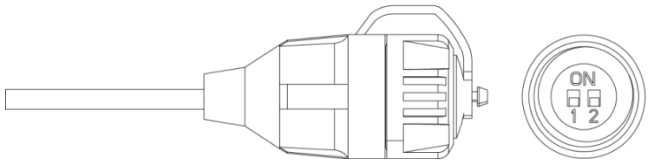

Table 2-1 DIP Switch Usage

Switch1	Switch2	output mode
OFF	OFF	CVI
SWITCHED ON	SWITCHED ON	CVBS
SWITCHED ON	OFF	AHD
OFF	SWITCHED ON	TVI

2.8 HD/SD control cable

When the HD/SD control cable circuit is closed, the video output mode changes from HD to SD. On the contrary, it will switch back to HD video output when the cable circuit is opened.

Figure 2-8 HD/SD control cable

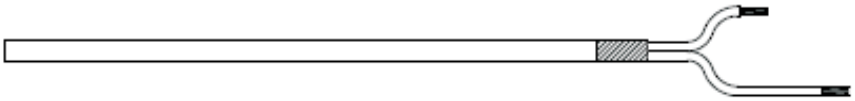

- HD/SD control cable is available on select models.

2.9 HDCVI Aviation Connector

The aviation connector could strengthen the connection of mobile devices and provide you with four ports for your convenience.

Figure 2-9 HDCVI Aviation Connector

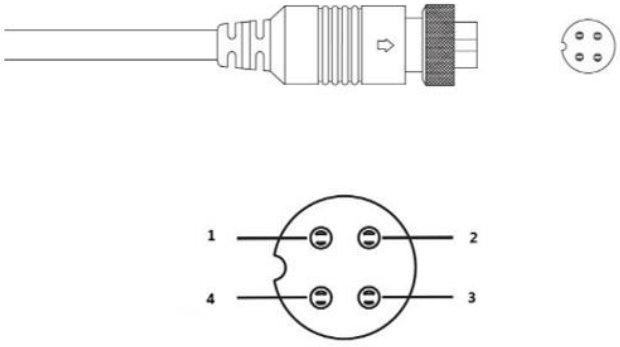

Table 2-2 HDCVI Aviation Connector Components

No.	Name	No.	Name
1	(Yellow): Video	3	(White): Connector of video land
two	(Black): Power Neutral	4	(Red): Power

3 Configuration and general use

Power on the device and connect it to the XVR with a coaxial cable. Then the live interface will be displayed. Then you can start configuring the HDCVI cameras on the XVR.

- The # of the XVR's coaxial ports will appear in the lower left corner of each window to indicate the corresponding camera.
- Ports may vary depending on XVR models. The actual model shall prevail.

3.1 Access the main menu of the XVR

Step 1 Paso 1: Double click the live interface and the charm menu will appear direct.

Step 2 Paso 2: Click on**Main menu**(Main Menu), and then access the system. The XVR main menu will appear.

Figure 3-1 XVR Main Menu

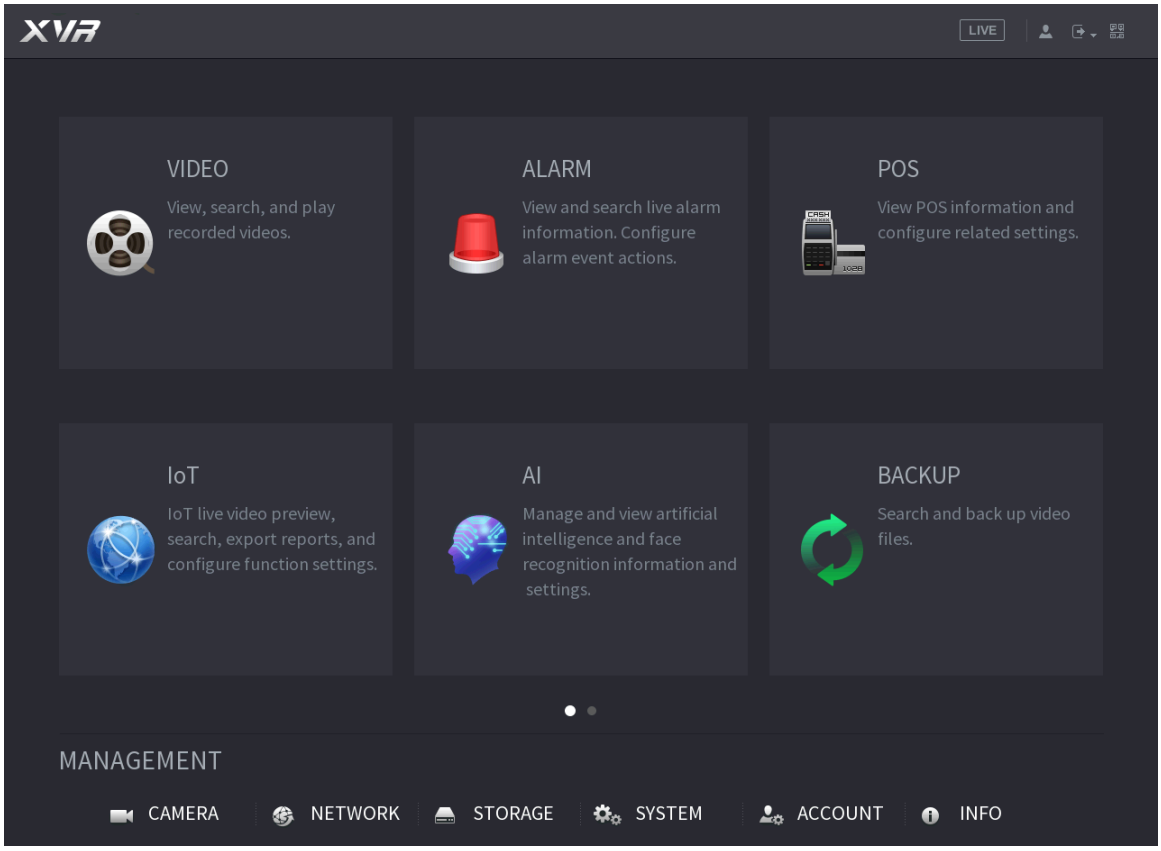

3.2 Audio input setting

Audio input is available on select models.

Step 3 Paso 1: In the interface of**Main menu**(Main Menu), select**CAMERA > ENCODE > encode**(CAMERA > ENCODE > Encode).

Step 4 Paso 2: In the dropdown list of**Channel I**(Channel I), select the device that want to configure based on the coaxial port No.

Step 5 Paso 3: In**main transmission**(Main Stream), click**More settings**(More Settings).

Figure 3-2 Encoding Settings

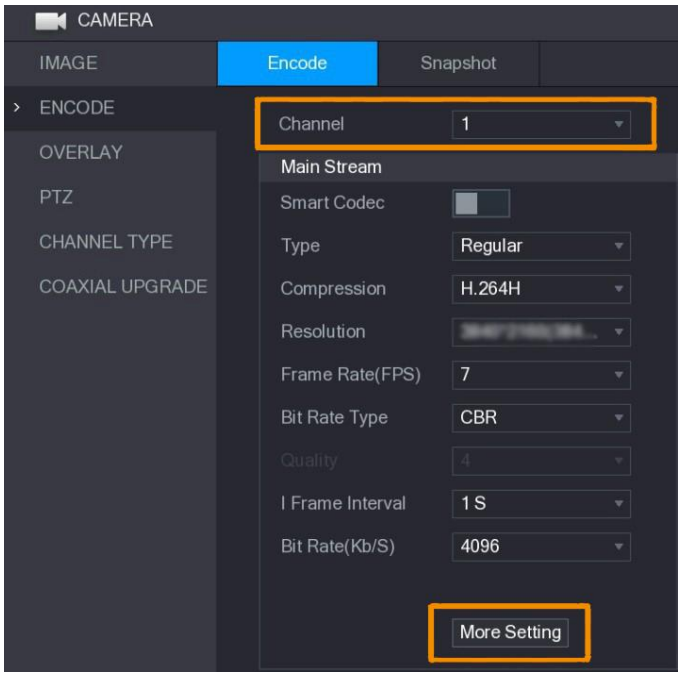

Step 6 Paso 4: in the interface**More settings**(More Setting), activate the function**audio encode**(Audio Encode), and then configure the audio settings. On the list**audio format**(Audio Format), leave it as default; on the list**audio source** (Audio Source), select**HDCVI**.

Step 7 Paso 5: Click on**Save**(Save).

Figure 3-3 More settings

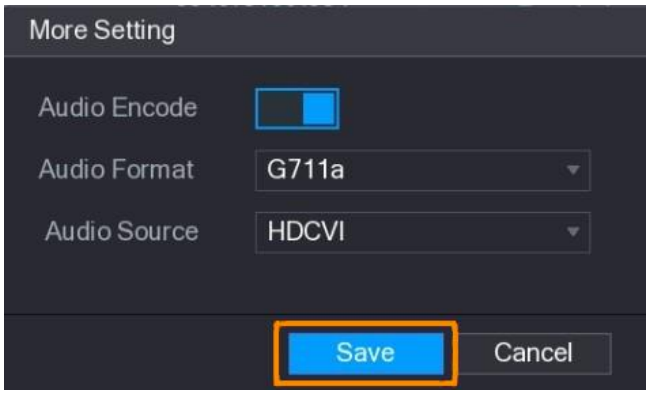

Step 8 Paso 6: in the interface**Encode**(Encode), click**Apply**(Apply).

3.3 Operate the PTZ control panel

3.3.1 OSD operation menu

- OSD menus of different cameras may vary, and the actual product shall prevail.
- When you use the OSD menu to restore the device to default settings, the device's resolution, mode, frame rate, and language will not be restored.

Step 9 Paso 1: In the live interface, right click the device you want set up. The quick menu will be displayed.

Figure 3-4 Shortcut menu

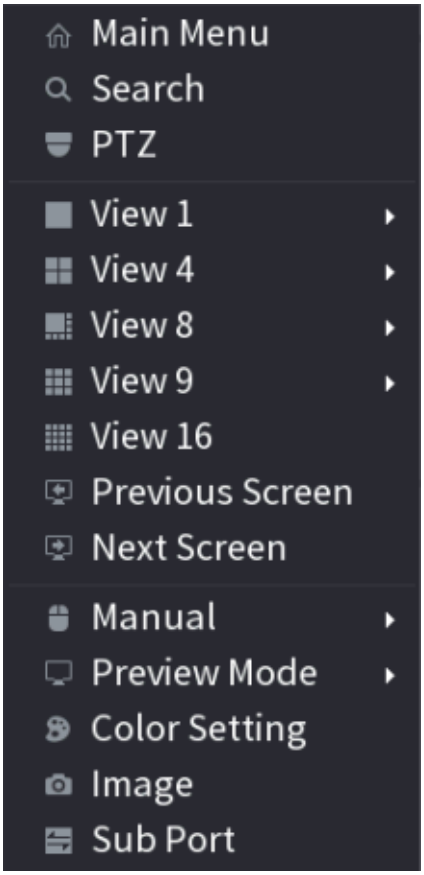

Step 10 Paso 2: Click on **PTZ** and touch to expand the menu.

Figure 3-5 PTZ Settings Options



Step 11 Paso 3: click on . Dashboard will be displayed **OPERATION MENU** (MENU OPERATION).

Figure 3-6 Menu Usage Panel

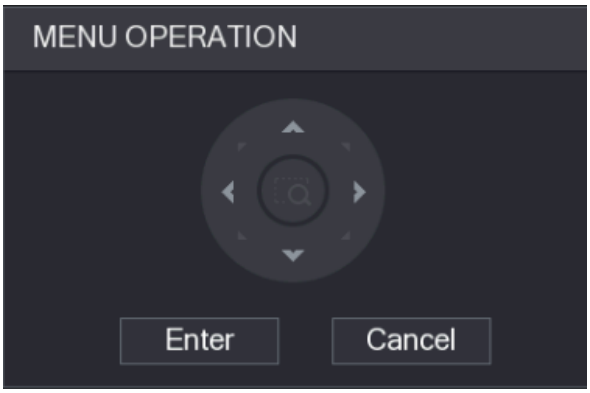

Table 3-1 Menu usage panel function

Button	Function	Button	Function
enter	Access or confirm an item	,	Select an item
Cancel	Exit OSD menu	,	Change element value

The corresponding device OSD menu will appear on the live interface. If the value of OSD item is " ", click **To accept**(Enter) to go to the next level of this element. Click on **Return**(Back) to return to the previous level. Click on **Cancel**(Cancel) to exit the OSD menu without saving the changes.

Figure 3-7 On Screen Display (OSD)

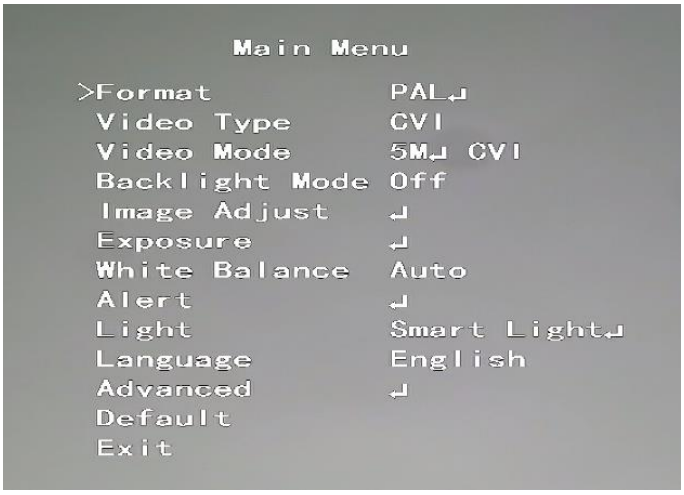

3.3.2 Using autofocus (AF)

Table 3-2 AF parameter

Parameter	Description
zoom	: Reduce. : Enlarge.
Approach	: Zoom far.

Parameter	Description
	: Focus close.
Diaphragm	: Auto focus. : Open the OSD menu.
PTZ movement	Compatible with 8 addresses.
	Click on and then you can control the four directions (left, right, up and down) of the PTZ using the mouse.
	Click on to display the PTZ control panel.

4 Smart light settings

camera

This chapter explains how to set the smart light operating modes, including auto mode and manual mode. The smart light will automatically change white light brightness based on ambient lighting conditions to prevent overexposure. Smart light is only available on full color cameras.

4.1 Activate/Deactivate smart light

Smart light is on by default. Access the OSD menu (Figure 3-7) and select **Light > Smart light**(Light > Smart Light) to change the smart light mode.

4.2 Configure smart light settings

In smart light mode, set the maximum brightness level of the smart light and the device will automatically change the brightness according to the ambient lighting conditions. You can also set the sensitivity of the smart light.

Brightness level setting

Step 12 Paso 1: In the OSD menu, select**Light > Smart Light > Level** (Light > Smart Light > Level).

Step 13 Paso 2: select from**1**a**5**to set the maximum brightness level.

The maximum brightness level is 5 by default.

Step 14 Paso 3: Click on**Return**(Return) and then**Leave**(Exit) to leave the setting.

You can also manually set the maximum brightness level in**Light > Manual > Level** (Light > Manual > Level).

Sensitivity setting

Step 15 Paso 1: Select**Light > Smart Light > Sensitivity**(Light > Smart Light > Sensitivity).

Step 16 Paso 2: select from**1**a**5**to set the light sensitivity value intelligent.



The higher the value, the easier it is to activate the smart light.

The sensitivity level is 3 by default.

Step 17 Paso 3: Click on**Return**(Return) and then**Leave**(Exit) to leave the setting.

5 Configuration of the temperature chamber and humidity

The temperature and humidity camera can measure the ambient temperature and humidity and display the value on the live interface.

5.1 Enable/Disable temperature and humidity

Step 18 In the OSD menu (Figure 3-7), select**Advanced > Temp. and humidity** (Advanced > Temp. & Humidity) to turn the function on and off. You can see the real-time temperature and humidity on the image.

5.2 Set temperature measurement mode

The temperature and humidity chamber supports temperature correction outdoors in bright light. You can change the temperature measurement mode.

Step 19 Paso 1: turn on**Temp. and humidity**(Temp. & Humidity).

Step 20 Paso 2: Select**Standard**(Standard) or**Sunlight**(Sunlight) in the**Measurement mode**(Measure Mode) to change the temperature measurement mode. **Standard**(Standard) is set by default.

It is recommended to change the mode to**Standard**(Standard) or**Sunlight**(Sunlight) when be used indoors or outdoors, respectively.

5.3 Adjust the display of temperature and humidity

Step 21 Paso 1: Select**Advanced > Temperature and humidity > Location** (Advanced > Temperature & Humidity > Location) in the OSD menu.

Check that the temperature and humidity function is activated.

Step 22 Paso 2: Click the direction buttons on the PTZ menu to change the location displayed.

Step 23 Paso 3: Click on**To accept**(Enter) to save the settings.

Figure 5-1 Adjust the display of temperature and humidity.

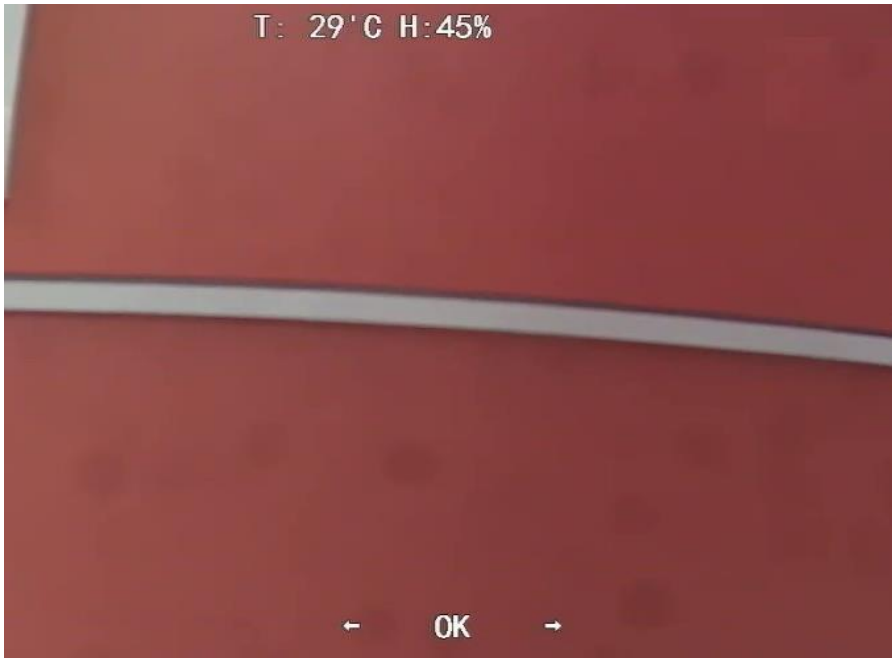

Right click anywhere on the monitoring image to return to the interface above after all settings are completed.

5.4 See the temperature and humidity

Step 24 Paso 1: Right click on the live interface to access the main menu of the XVR (Figure 3-1).

Step 25 Paso 2: Select **IoT > REAL TIME VISUALIZATION** (IoT > REALTIME DISPLAY), and then you can see the real-time temperature and humidity.

Figure 5-2 See the temperature and humidity

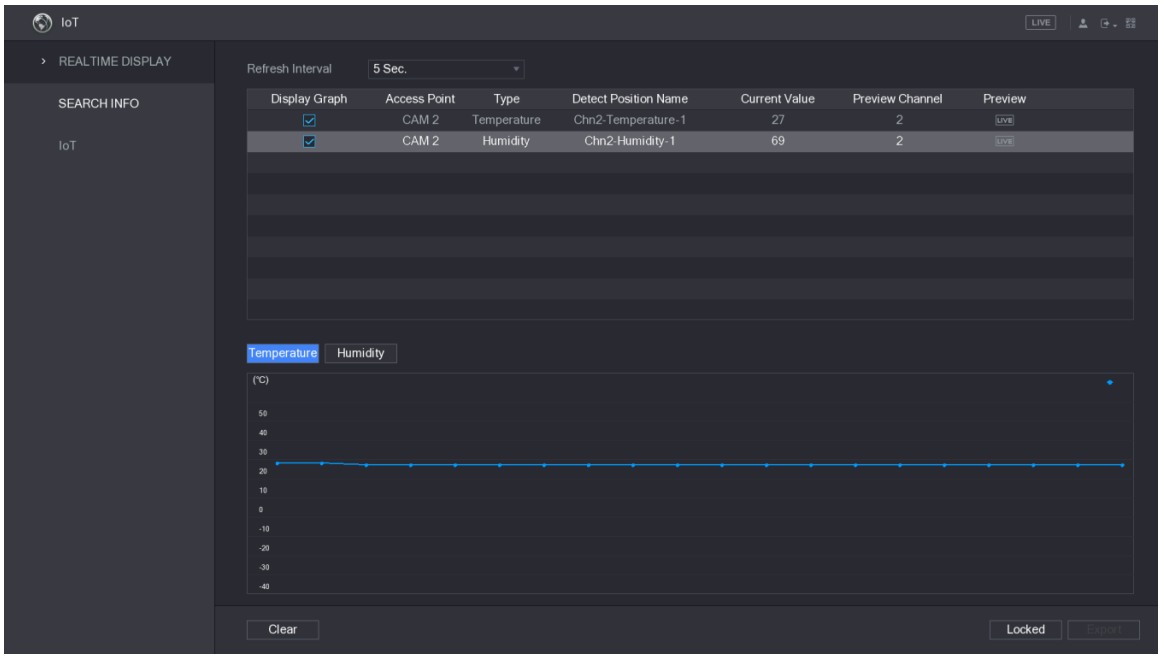

For more information, see the XVR user manual.

6 Activate camera settings dissuasive

Activating the deterrent camera can actively warn intruders with LEDs even before users are aware of the violation. Once the intrusion is detected, the LED will turn on to alert the intruder.

6.1 PIR detector detection range

The horizontal sensing range of the sensor is 100° or 110°.

Figure 6-1 Horizontal detection range

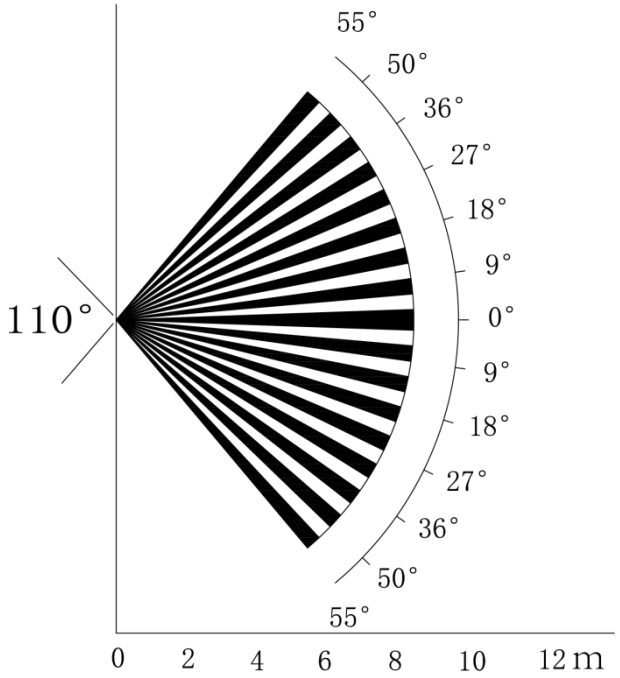

The vertical sensing distance of the sensor is 2m-10m, 1m-14m or 1m-12m.

Figure 6-2 Vertical sensing distance

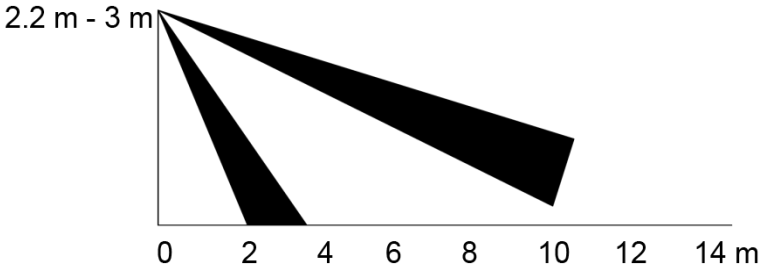

6.2 Set the activation mode

In the OSD menu (Figure 3-7), select**Alerts > Activation mode** (Alert > Trigger Mode).

If you select**Camera**(Camera Set), the acoustic and light alarm will be triggered on the device.

If you select**XVR**(XVR Set), the acoustic and light alarm will be triggered on the XVR.

To see more information about**XVR**(XVR Set), refer to the XVR user manual.

6.3 Set the acoustic alarm and light warning

This function is only available when the activation mode is set to**Camera** (Camera set).

In the OSD menu (Figure 3-7), select**Alert**(Alert). Adjustment**light warning** (Light Warning) on**activated**(ON), and then enter the submenu.

- ◇ For**Mode**(Mode), you can choose between**Lightning**(Lighting) and**Flash**.

  If you select**Flash**, you can set the**flash frequency**(FlashFrequency) in **Short**(Low), **Half**(Medium) or**high**(High).
- ◇ For the**alert duration**(Alert Duration), you can set it between 5 seconds and 60 seconds.

  The element of**sound alert**(Audio Alert), set it to**Activate**(ON), and then access the item.
- ◇ In**Audio**, you can choose between three different audios.

  You can contact the after-sales service to customize the audio of the alarms.
- ◇ The options for the item**Volume**(Volume) are:**Bass**(Low),**Medium**(Medium) and**Tall**(High).
- ◇ It is possible to adjust the**alert duration**(Alert Duration) from 5 to 60 seconds.

7 Input Camera Settings

This feature is available on selected models.

This series of devices can serve as an input to connect compatible wireless node devices such as door/window contacts, sirens and PIR detectors to the XVR to form a local alarm network. Once an alarm is triggered from a device on the network, the device transmits an alarm signal according to the setting.

Figure 7-1 Network diagram

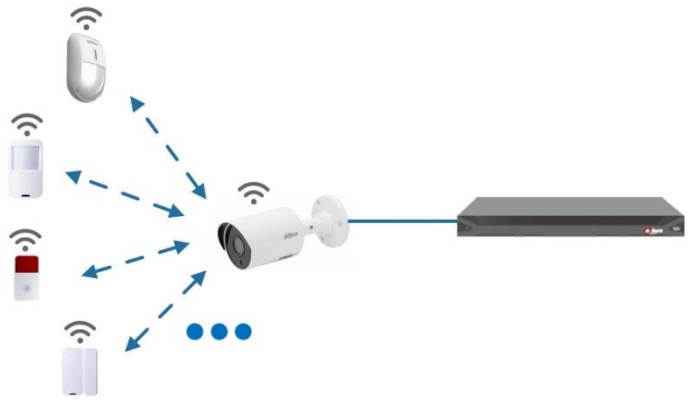

Connect the wireless node devices to the XVR with the input camera, and then configure the parameters.

For more detailed configuration, please refer to the user manual of the XVR or the node device.

7.2 Connect node devices in OSD menu

Step 26 Paso 1: In the OSD menu (Figure 3-7), select **Advanced**(Advanced). configure **to**

Step 27 Paso 2: **register**(roll) in **ON** and the device will enter standby mode. bonding.

Step 28 Turn on the node device and enter pairing mode according to the corresponding manual.

Step 29 Paso 3: After pairing is complete, you can check the information of the device connected to the interface **Sensor Pairing**(Pair Sensor).

7.3 Connect node devices to the XVR

Step 30 Paso 1: From the XVR main menu (Figure 3-1), select **IoT > ADMINISTRATOR > Sensor linkage**(IoT > MANAGER > Sensor Pairing).

Step 31 Paso 2: click on **Add**(Add).

Figure 7-2 Add sensor linkage (1)

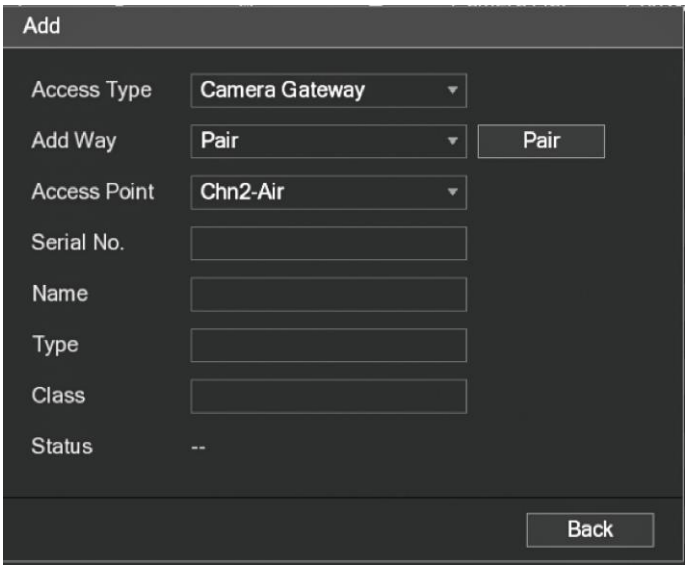

Step 32 Paso 3: On the list**Access type**(Access Type), select**door camera link**
(Camera Gateway).

Step 33 Paso 4: Click on**Link**(Pair) and the device will enter pairing mode.
Use the node device and enter binding mode.

Figure 7-3 Add sensor linkage (2)

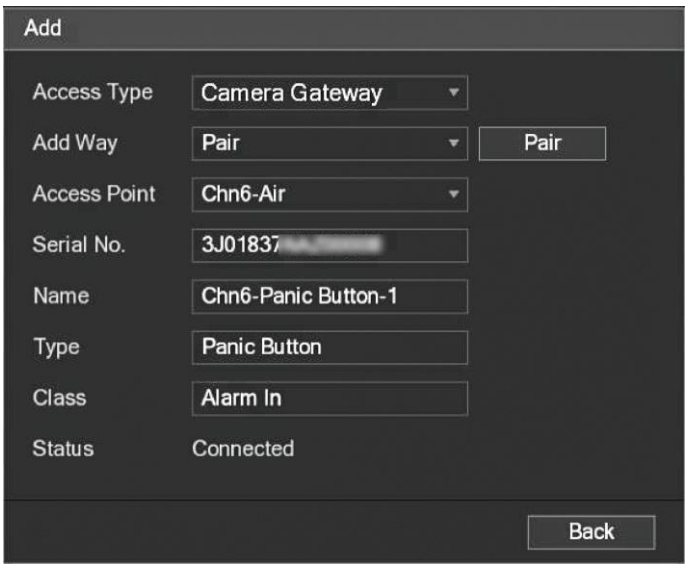

Step 34 Paso 5: Click on**Behind**(back).

Click on to modify the device name and click for remove the node device.

Figure 7-4 connected device

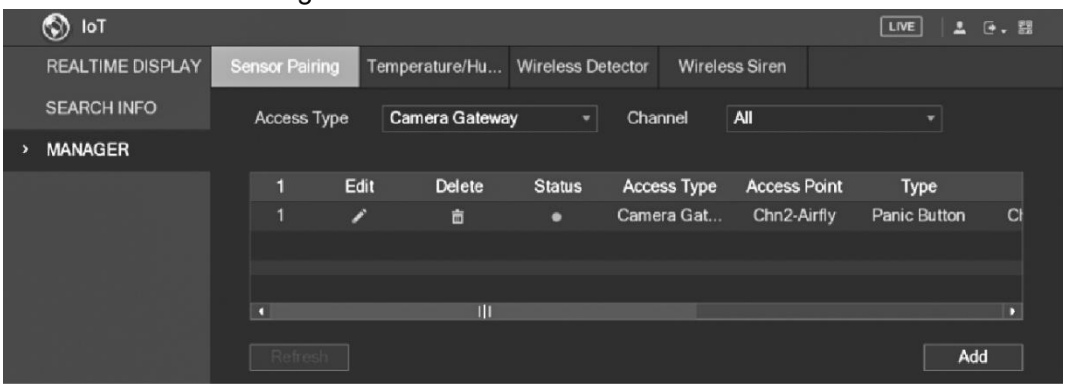

8 Box camera installation

- The lens is not installed in the device when it leaves the factory and it is necessary install it.
- Do not remove the electrostatic absorption film on the surface of the transparent lid before finishing the installation and debugging in order to avoid damage during installation.
- Install the lens to the device after unpacking to prevent the lens module from device is exposed for a prolonged period to a humid environment.
- The installation surface must be thick enough to support a weight when least 3 times that of the device.
- Install the C/CS adapter ring on the camera if you use the C mount lens.
- The installation figure below is for reference only.

8.1 Lens installation

8.1.1 Install the type 1 lens

Step 35 Paso 1: Remove the protective cap from the device. Align the lens with the position of device lens (install the C/CS adapter ring on the device if you use the C-mount lens). Turn it clockwise to fix it well.

Step 36 Paso 2: Insert the lens cable connector into the diaphragm lens socket side panel of the device. Skip this step if you are using an auto diaphragm lens.

Step 37 Paso 3: Tighten the screw near the focus ring, and then turn it clockwise. counterclockwise to manually pull out the focus ring until you get a clear video image.

Step 38 Paso 4: After the focus process is complete, tighten the ring close to the ring of focus.

Step 39 Paso 5: Tighten the focus ring.

Figure 8-1 Lens installation (1)

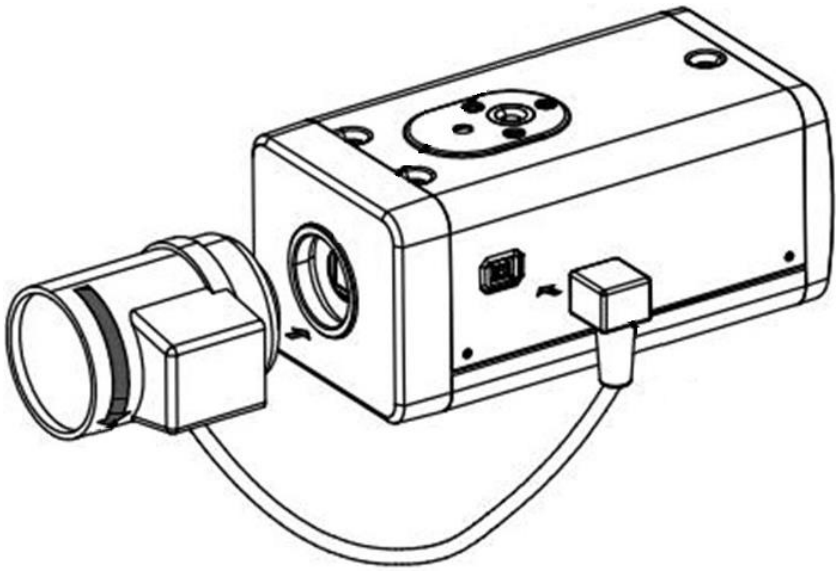

8.1.2 Install the type 2 lens

Figure 8-2 Front panel

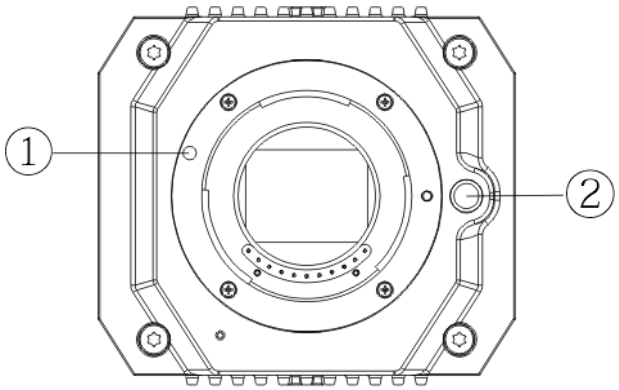

Table 8-1 Front panel components

No.	Name	No.	Name
1	red sign	two	Lens release button

Step 40 Paso 1: Remove the protective cap from the lens of the device, align the red mark on the lens with red sign①device, turn it clockwise until the lens release button②go up. The lens installation is now complete.

Step 41 Paso 2: Loosen the screw near the focus ring and manually rotate the focus ring. focus out until you get a clear video image. Skip this step if you are using an autofocus compatible lens.

Figure 8-3 Lens installation (2)

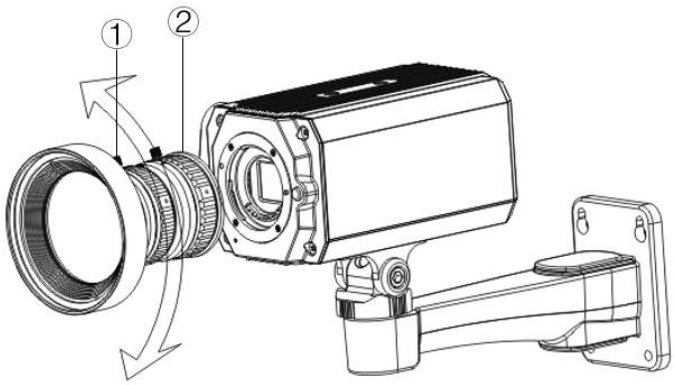

Table 8-2 Lens Components

No.	Name	No.	Name
1	Screw	two	focus ring

Step 42 Paso 3: After focusing, tighten the focus ring screw and fix it.

To detach the lens, press the lens detach button ②, turn the lens clockwise. counterclockwise and release the buckle.

8.2 I/O Port Installation

8.2.1 Cable connection

Step 43 Paso 1: Hold down the mini screwdriver to press the slot button of the cable to connect.

Step 44 Paso 2: Insert the cable into the slot.

Step 45 Paso 3: Drop the screwdriver.

Figure 8-4 Install the wire

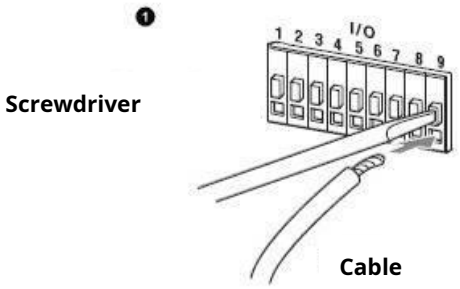

8.2.2 Remove the cable

Step 46 Paso 1: Use the mini screwdriver to press the button on the cable slot to connect.

Step 47 Paso 2: Remove the cable from the slot.

Step 48 Paso 3: Drop the screwdriver.

Figure 8-5 remove the wire

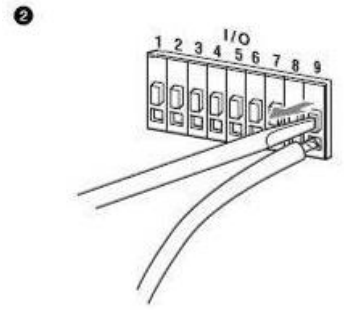

8.3 Device Installation

The device is supplied without the bracket and mounting screw. you will need to buy them separately.

Figure 8-6 device components

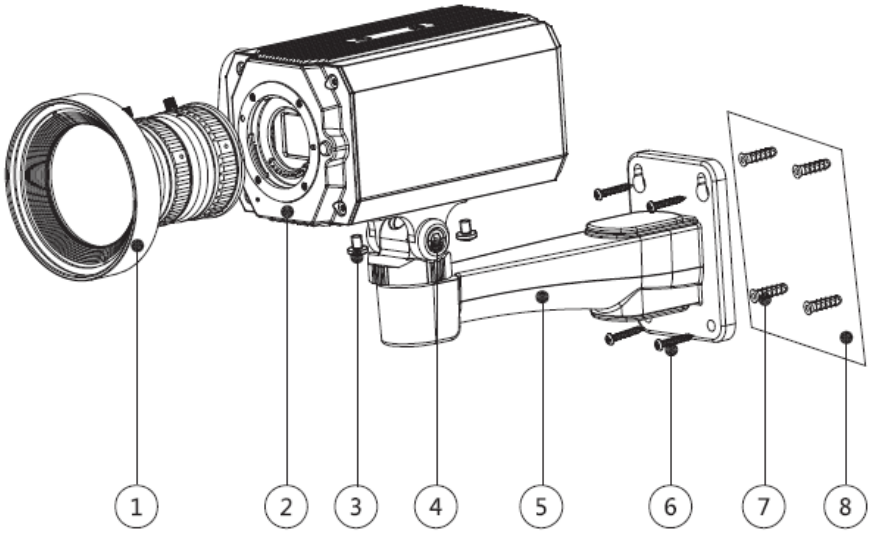

Table 8-3 Device Components

No.	Name	No.	Name
1	Lens	5	Mounting bracket
two	Front panel	6	Tapping screw
3	Fixing screw	7	expansion bolt
4	Bracket adjustment screw	8	mounting surface

Step 49 Paso 1: Attach mounting bracket⑤to mounting surface⑧.

1) Mark the bracket mounting hole positions on the mounting surface⑧,drill four holes at the marked positions, insert four expansion bolts⑦into the mounting holes and tighten them.
2) Align the four screw holes on the bottom of the mounting bracket⑤ with the expansion bolts, insert four self-tapping screws⑥and then tighten them.

Step 50 Paso 2: Attach the device to the mounting bracket⑤.

Step 51 Align the mounting hole positions on the bottom of the device case with the mounting hole positions on the mounting bracket ②, and then install the device on the mounting bracket with the fixing screw ②.

Step 52 Paso 3: Adjust the monitoring angle of the camera.

Step 53 Use a wrench to loosen the adjusting screw ②, adjust the camera to the place to be monitored, and then use the wrench to tighten the bracket adjusting screw ② to fix the device.

Step 54 Paso 4: Connect the cable to the rear panel of the device.

Step 55 After installing the device and connecting the cable, you can view the monitoring image through a storage device, such as XVR.

9 Fisheye camera setup

The fisheye camera (panoramic camera) has a wide monitoring angle, but the video is distorted. The dewarping function can provide a suitable and vivid video image for human eyes. The fisheye function must be configured on the XVR.

9.1 Fisheye dewarp in live interface

Step 56 Paso 1: From the XVR shortcut menu, select **Fish eye**(Fisheye). Set the **adjusted mode**(FitMode) and the **sample mode**(ShowMode)

Step 57 Paso 2:

of eye

of fish

Figure 9-1 fisheye menu

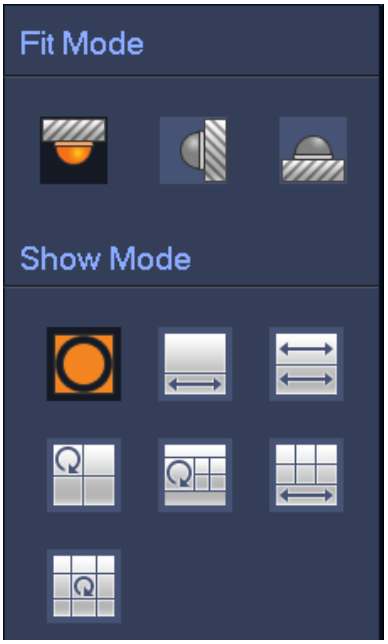

Table 9-1 Fisheye Parameters

adjusted mode	Icon	Description
ceiling mount ( ) floor mount ( )		Original 360° panoramic window
		1 dewarp window and 1 panoramic zoom window
		2 enlarged panoramic windows
		1 360° panoramic window and 3 dewarping windows
		1 360° panoramic window and 4 dewarping windows

adjusted mode	Icon	Description
		4 dewarp windows and 1 panoramic zoom window
		1 360° panoramic window and 8 dewarping windows
wall mount ( )		Original 360° panoramic window
		Panoramic enlarged window
		1 panoramic display window and 3 dewarping windows
		1 panoramic display window and 4 dewarping windows
		1 panoramic display window and 8 dewarping windows

- Dewarping modes may vary for different modes of installation.
- For the non-fisheye channel, an indication will be displayed reminding you that the fisheye function Dewarping is not supported.
- Some series of products support 180° dewarping which is only can mount on wall. The actual product shall prevail.

Figure 9-2 fisheye display mode



You can use the mouse to drag the colored areas of the left original screen or the rectangular screens on the right to change monitoring ranges.

(Not compatible with wall mounting).

9.2 Fisheye dewarping during playback

When you play the video recorded with fisheye, you can use the correction function spherical to adjust the video.

Step 1: On the XVR main menu, click**SEARCH**(SEARCH).

Step 2: Select 1-window playback mode and fisheye channel and then click to play it. 

Step 3: Right click to go to playback interface with spherical correction.

10 Frequently Asked Questions

10.1 PoC power supply

PoC XVR supports PoC function.

It is possible to divide the PoC camera into AT camera and AF camera. The power consumption of the AT camera is less than 12W and the power consumption of the AF camera is less than 6W.

You must check the maximum power of PoC before using it. Assuming the maximum power of an XVR is 48 W, the XVR can connect AT cameras up to 48/12=4 or AF cameras up to 48/6=8.

When the device is in PoC power mode, please do not connect other device between the device and PoC XVR or PoC transceiver, such as UTC, Balun, optical transceiver, distributor, converter, etc.; Otherwise, the device may be burned.

The PoC power supply has high voltage. Do not disassemble the device during normal operation; Otherwise, it may endanger both the device and users due to high voltage.

10.2 long distance feeding

In many cases, our customers use long-distance power, transmitting 12 VDC to cameras that are more than 100m away. This type of feeding could cause problems.

Q1: The devices reboot repeatedly or there is an ICR failure.

Possible Reasons: A long power cord can lead to large voltage drops in the computer's power cord, and turning on the IR light at night increases the voltage drop, causing the device to reboot as a result. After the device restarts, the ICR defaults to Day mode. Based on the ambient light at night, the device will work in Night mode, and then the infrared light will illuminate, causing the device to reset again due to low voltage. In this way, the ICR is activated every 2 seconds, affecting its useful life.

Q2: Can't reboot the device at night, black screen or reboot when activating ICR.

Possible Reasons: A long power cord can lead to large voltage drops in the computer's power cord, and turning on the IR light at night increases the voltage drop, resulting in device reboot and black screen.

Solution: During construction, if the camera location is far from the power supply, you need to use a long-distance independent power supply or purchase a dual DP power supply to use 24VAC power.

10.3 Centralized power supply

The usual problem with centralized power supply is obvious black streaks appearing on the device screen that interfere with the display.

The principle of centralized feeding is as follows:

Figure 10-1 Centralized feeding principle

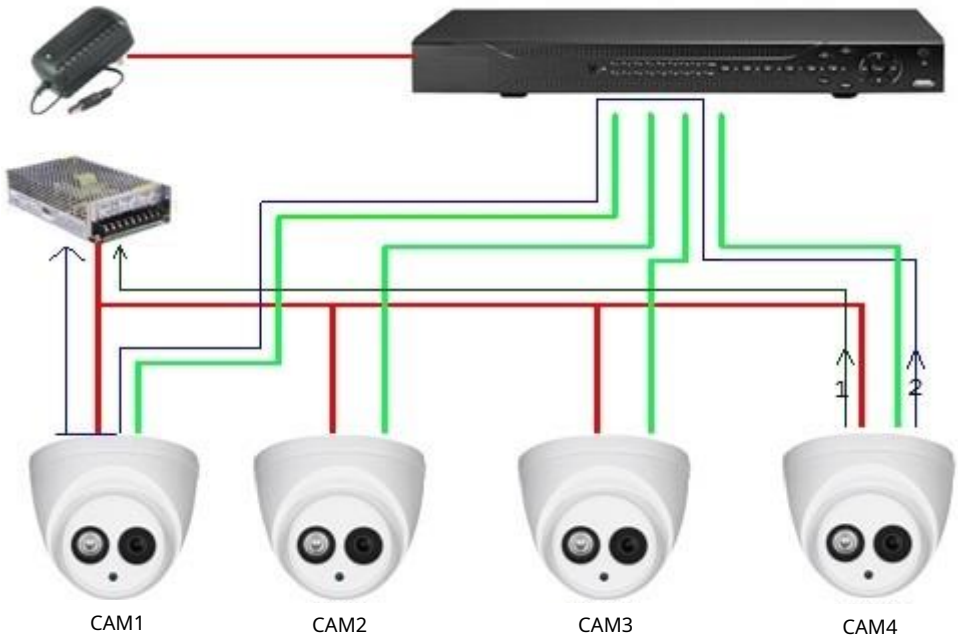

The power output of CAM4 has two paths, return path 1 and return path 2. Backflow 2 first flows to CAM1 and then flows to the power supply from the power supply ground of CAM1. In this way, backflow from CAM4's power supply ground affects CAM1's video ground, resulting in interference streaks on the screen. CAM4 also interferes with CAM2 and CAM3.

Likewise, CAM1, CAM2, or CAM3 affect the other cameras as well as themselves.

The main reason for centralized power interference is that the camera's power supply ground is not isolated. To solve this problem: Use dual power devices with isolation from the power supply ground; equip low power devices with electrical isolators to block return path 2. Use isolated power supplies for each channel or power device separately. These are the two recommended methods.

10.4 Connector water protection

HDCVI cameras must be waterproof and well protected. Once installed, wrap the BNC connector and power connector well with insulating or waterproof tape to prevent the ingress of water and external electromotive forces. When a device with a metal casing is installed on metal surfaces, such as elevators or buses, the metal casing should not be in contact with the installation surface to prevent the ingress of water and external electromotive forces.

Figure 10-2 Water protection measures

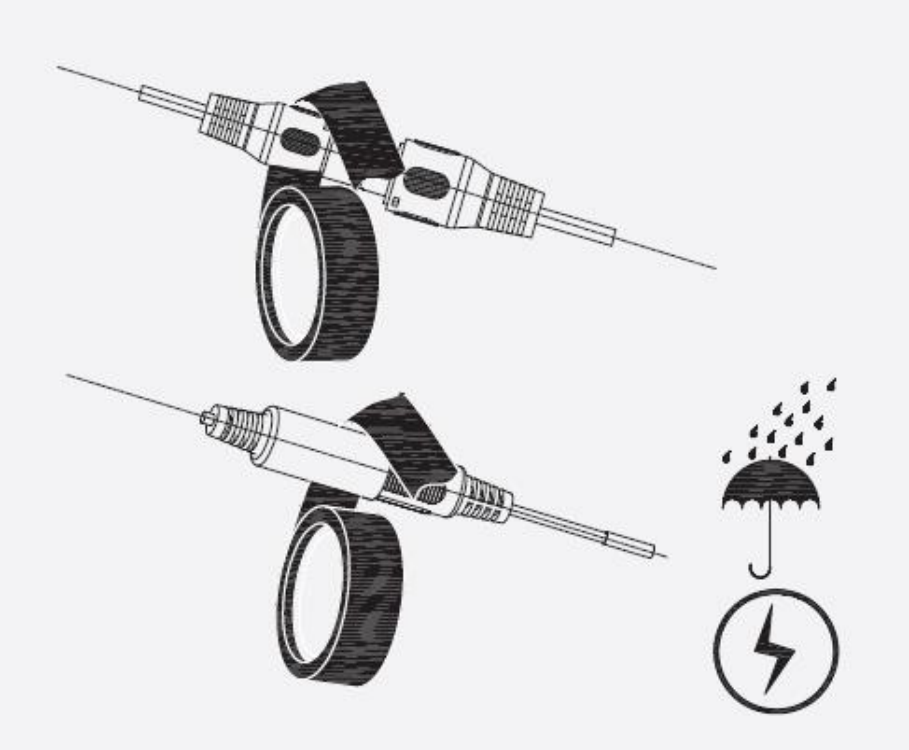

11 Maintenance



To maintain image quality and proper device operation,
Please read the following maintenance instructions carefully and keep a strong adhesion.

Desiccant Removal and Replacement

- Carefully follow the instructions in the manual when performing any device disassembly operations; Otherwise, it may cause water leakage or poor image quality due to unprofessional disassembly.
- Please contact after-sales service for replacement of the desiccant if condensed mist appears on the lens after taking it out of the box or when the desiccant turns green. (Not all models include desiccant.)

Lens and lens protector maintenance

- The lens and lens protector are covered with an anti-reflective coating which could become contaminated or damaged and cause lens scratches or blurred images if they come into contact with dust, grease, fingerprints or other similar substances.
- Do not directly touch the image sensor (CCD or CMOS). Dust and dirt can be removed with an air blower, or you can gently wipe the lens with a soft cloth moistened with alcohol.

Device Body Maintenance

- The device casing can be cleaned with a dry cloth, which can be slightly dampened with a mild detergent to remove stubborn stains.
- To avoid possible damage to the coating on the device case that could result in decreased performance, do not use volatile solvents such as alcohol, benzene, thinner, etc., to clean the device case, nor can you use a strong, abrasive detergent. .