DHI-VTO4202F-P-S3

2Mp Modular Apartment Door Station



- Anodized alumimum front panel
- CMOS low illumination 2MP HD colorful 160° fisheye camera
- Video intercom function
- Access control function that supports two locks
- Mobile phone app, talk to the visitor or unlock the door remotely on your phone
- Compatibility 2-wire Interface & RJ45 Interface
- IK07&IP65
- Support H.265
- Support surface and flush mount
- Modules make the device with great expansibility



Technical Specification

System

Main Processor	Embedded processor
Operating System	Embedded Linux Operation System
Button Type	Mechanical
Interoperability	ONVIF; CGI
Network Protocol	SIP; P2P; IPv4; UPnP; SNMP; DNS; DDNS; RTSP; RTP; TCP; UDP

Basic

Camera	1/2.5" 2MP CMOS Low Illumination HD Colorful Fisheye Camera
Field of View	Horizontal: 168.6°; vertical: 87.1; diagonal:176.7°
Focal Length	1.9 mm
WDR	120 dB
Noise Reduction	3D DNR
Video Compression	H.265
Video Resolution	50Hz: Main Stream (720P@25 fps), sub stream (1080P@25 fps) 60Hz: Main Stream (720P@30 fps), sub stream (1080P@30 fps)
Video Frame Rate	25 fps
Video Bit Rate	256 Kbps to 4 Mbps
Light Compensation	Auto IR
Day/Night	Auto (ICR)
Audio Compression	G.711a; G.711u; PCM
Audio Input	1 channel
Audio Output	Built-in speaker
Audio Mode	2-way voice communication
Audio Enhancement	Echo suppression/digital noise reduction
Audio Bit Rate	16 KHz, 16 Bit
Status Indicator Light	3

Port

RS-485 Port	1
Alarm Output	1
Power Output	1-ch 12 VDC 100mA
Exit Button	1
Door Status Detection	1
Lock Control	1
Network Port	One RJ45 10M/100M network port
Storage	Micro SD card (up to 64GB)

General

Appearance color	Silver
Power Supply	Dahua 2-wire switch (max. power supply distance 50 m) DC 48V 1A Standard PoE

Power Adapter	Optional
Installation	Flush/surface mount
Certifications	CE; FCC; UL
Accessory	Flush/surface mount
Product Dimensions	100 mm × 100 mm × 36 mm (3.94" × 3.94" × 1.41")
Protection	IK07; IP65
Operating Temperature	–30°C to +60°C (–22°F to 140°F)
Operating Humidity	10%–90% (RH, non-condensing)
Operating Altitude	0 m–3000 m
Power Consumption	≤ 12W
Net Weight	0.35 kg (0.77 lb)
Gross Weight	0.4 kg (0.88 lb)

Ordering Information

Type	Model	Description
Modules	DHI-VTO4202F-P-S3	Camera module
	DHI-VTO4202F-MB1	One-button module
	DHI-VTO4202F-MB2	Two-button module
	DHI-VTO4202F-MB5	Five-button module
	DHI-VTO4202F-MS	Display module
	DHI-VTO4202F-ML	Indicator module
	DHI-VTO4202F-MK	Keyboard module
	DHI-VTO4202F-MF	Fingerprint module
	DHI-VTO4202F-MR	Card swiping module
	DHI-VTO4202F-MN	Blank Module
Accessories	VTM125	Two-modular mounting plate
	VTM126	Three-modular mounting plate
	VTM127	Two-modular mounting box
	VTM128	Three-modular mounting box
Rain Cover	VTM52R2	Surface-mounted rain cover for one 2-module VTO4202F
	VTM53R3	Surface-mounted rain cover for one 3-module VTO4202F
	VTM54R4	Surface-mounted rain cover for multiple 2-module VTO4202F
	VTM56R6	Surface-mounted rain cover for multiple 3-module VTO4202F

Dimensions (mm[inch])

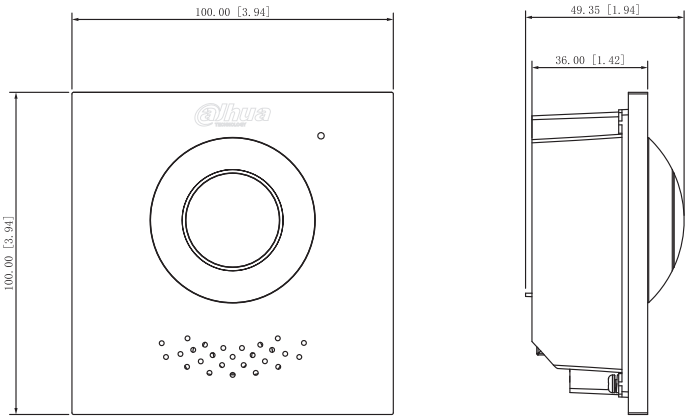

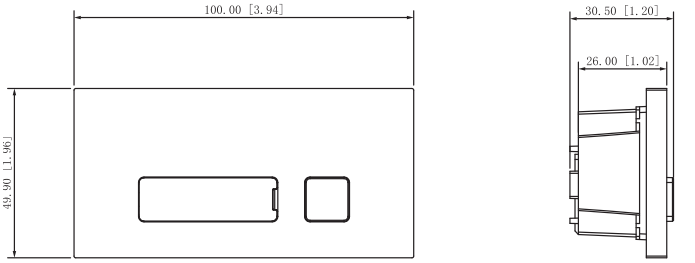

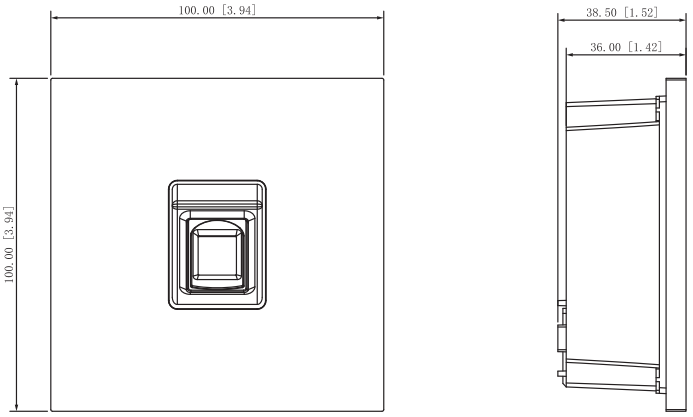

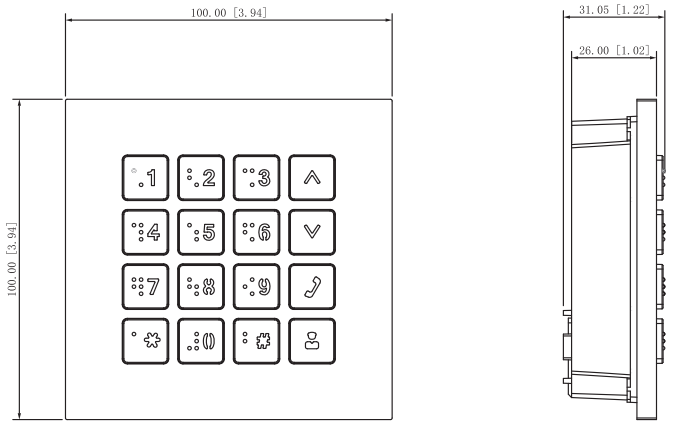

Dimensions (mm[inch])

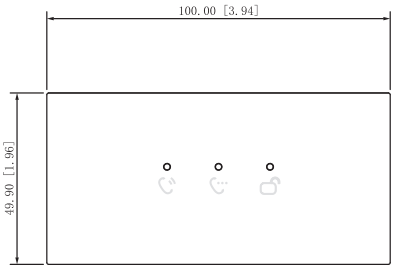

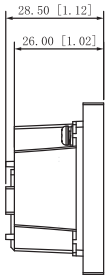

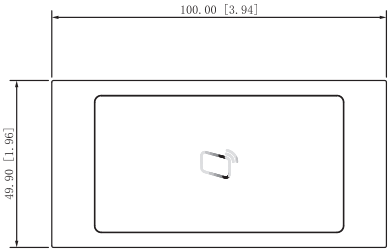

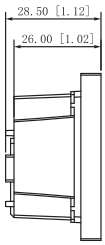

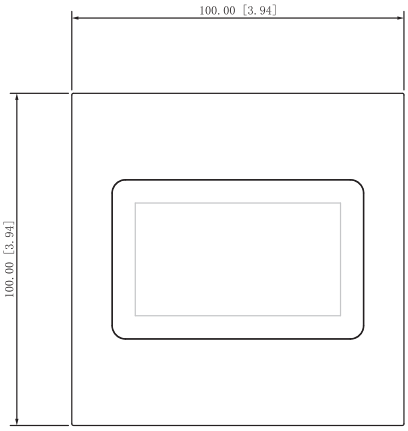

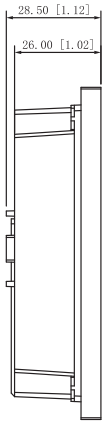

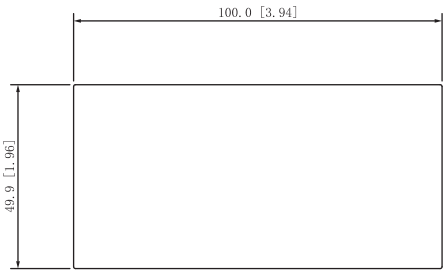

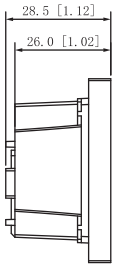

Application

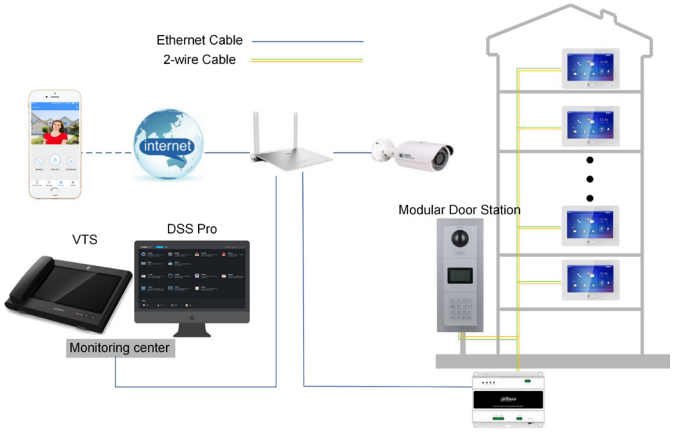

Rev 002.000 © 2022 Dahua. All rights reserved. Design and specifications are subject to change without notice.
The images, specifications and information mentioned in the document are only for reference, and might differ from the actual product.