nVent | HOFFMAN

We connect and protect

Free-Stand, Type 3R and 4, Single or Dual Access



INDUSTRY STANDARDS

One-door, Single and Dual-Access:
UL 508A Listed: Type 12, 3R, 4
cUL Listed per CSA C22.2 No. 94: Type 12, 3R, 4
UL File No. E61997
NEMA/EEMAC Type 12, 3R, 4
IEC 60529, IP66

Two-door, Single and Dual-Access:
UL 508A Listed: Type 12, 3R
cUL Listed per CSA C22.2 No. 94: Type 12, 3R
UL File No. E61997
NEMA/EEMAC Type 12, 3R
IEC 60529, IP32

E.I.A. RS310D

Applicable industry standards only for enclosures with Seismic Accessories:
NEBS- Telcordia GR-63-CORE Zone 4, tested with 1000 lbs evenly distributed
OSHPD Pre-Approval OPM-0247-13

APPLICATION

Free-standing enclosure featuring a sturdy unibody construction and flexible internal mounting options. Available standard with front or front-and-rear access. Now universally rated to function in not only indoor but outdoor applications. Please note that at present, Type 4 only applies to the one-door, single or dual-access solutions.

ACCESSORIES

Panels
Rack Mounting Angels L-Style
CEL Enclosure Lights
Floor Stand Kit
HF Side-Mount Filter Fans
Steel, Stainless Steel and Non-Metallic Window Kits
HOL-SEALERS Hole Seals

SPECIFICATIONS

- 12 gauge steel
- Seams continuously welded and ground smooth; no holes or knockouts
- Stiffeners on back of two-door enclosures maintain flatness and increase rigidity
- Lifting eyes for easy handling
- 3-point latches operated by defeater Powerglide handle
- Concealed, easy-to-remove stainless steel hinges
- High-impact thermoplastic, 12.00 × 12.00 inch data pockets supplied standard
- Internal mounting channels welded horizontally to sides at top, bottom and center
- Optional panels and rack mount angles can be mounted anywhere along channels (sold separately)
- Oil-resistant door gasket
- Bonding provision on door
- Provision for mounting LED light

To meet GR-63-CORE Zone 4 seismic standards enclosures must be one-door, single or dual-access design, and include the following accessories (sold separately):

For Seismic Free-Stand with Panel

- Seismic Mounting Plate Kit
- Seismic Panel Mounting Kit
- Panel, Full-Length

For Seismic Free-Stand with Rack Angles

- Seismic Mounting Plate Kit
- Rack Mounting Angles - L-Style (Type RP), Full

FINISH

ANSI 61 gray, polyester powder paint outside and inside; Optional panels available with a white or conductive finish.

NOTES

Please visit our Cooling Selection Tool at https:/coolingselection.nVent.com to explore cooling products for your application.

MODIFICATION AND CUSTOMIZATION

nVent HOFFMAN excels at modifying and customizing products to your specifications. Contact your local nVent HOFFMAN sales office or distributor for complete information.

BULLETIN: A30

STANDARD PRODUCT ONE-DOOR SINGLE-ACCESS

Part Number	A × B × C in	A × B × C mm	F in	F mm	G in	G mm	Number of Lifting Eyes	Number of Rack Units
A602418FSG	60.06 × 24.06 × 18.06	1526 × 611 × 459	32.03	814	23.12	587	2	28
A722418FSG	72.06 × 24.06 × 18.06	1830 × 611 × 459	38.03	966	29.12	740	2	35
A723018FSG	72.06 × 30.06 × 18.06	1830 × 764 × 459	38.03	966	29.12	740	2	35
A723618FSG	72.06 × 36.06 × 18.06	1830 × 916 × 459	38.03	966	29.12	740	2	35
A902420FSG	90.06 × 24.06 × 20.06	2288 × 611 × 510	47.03	1195	38.12	968	2	45
A903620FSG	90.06 × 36.06 × 20.06	2288 × 916 × 510	47.03	1195	38.12	968	2	45
A603624FSG	60.06 × 36.06 × 24.06	1526 × 916 × 611	32.03	814	23.12	587	2	28
A722424FSG	72.06 × 24.06 × 24.06	1830 × 611 × 611	38.03	966	29.12	740	2	35
A723024FSG	72.06 × 30.06 × 24.06	1830 × 764 × 611	38.03	966	29.12	740	2	35
A723624FSG	72.06 × 36.06 × 24.06	1830 × 916 × 611	38.03	966	29.12	740	2	35
A903624FSG	90.06 × 36.06 × 24.06	2288 × 916 × 611	47.03	1195	38.12	968	2	45
A723630FSG	72.06 × 36.06 × 30.06	1830 × 916 × 764	38.03	966	29.12	740	4	35
A723636FSG	72.06 × 36.06 × 36.06	1830 × 916 × 916	38.03	966	29.12	740	4	35
A903636FSG	90.06 × 36.06 × 36.06	2288 × 916 × 916	47.03	1195	38.12	968	4	45

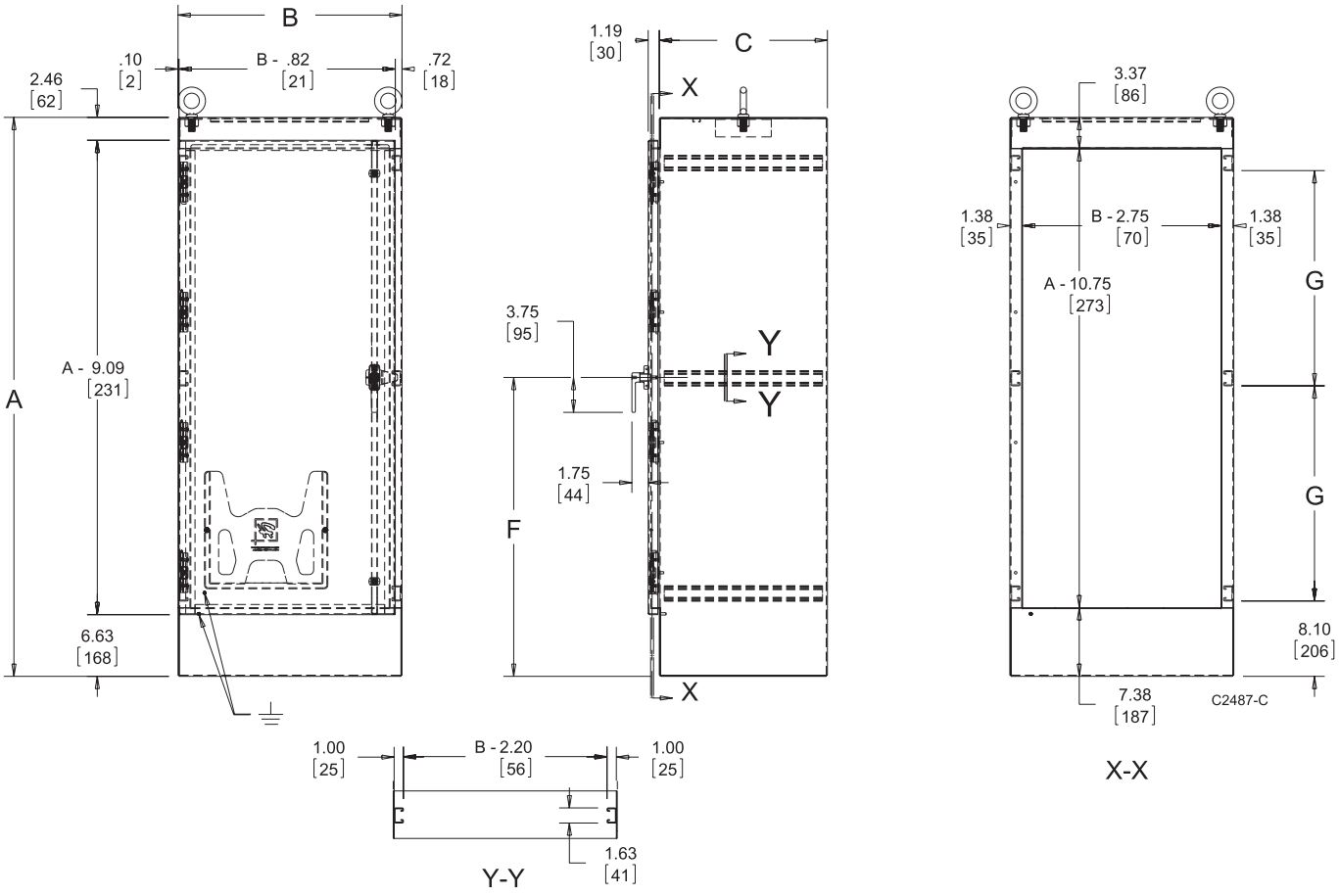

STANDARD PRODUCT ONE-DOOR DUAL-ACCESS

Part Number	A × B × C in	A × B × C mm	F in	F mm	G in	G mm	Number of Lifting Eyes	Number of Rack Units
A722424FSDAG	72.06 × 24.06 × 24.06	1830 × 611 × 611	38.03	966	29.12	740	2	35
A723024FSDAG	72.06 × 30.06 × 24.06	1830 × 764 × 611	38.03	966	29.12	740	2	35
A723624FSDAG	72.06 × 36.06 × 24.06	1830 × 916 × 611	38.03	966	29.12	740	2	35
A903624FSDAG	90.06 × 36.06 × 24.06	2288 × 916 × 611	47.03	1195	38.12	968	2	45
A722430FSDAG	72.06 × 24.06 × 30.06	1830 × 611 × 764	38.03	966	29.12	740	4	35
A722436FSDAG	72.06 × 24.06 × 36.06	1830 × 611 × 916	38.03	966	29.12	740	4	35
A723636FSDAG	72.06 × 36.06 × 36.06	1830 × 916 × 916	38.03	966	29.12	740	4	35
A903636FSDAG	90.06 × 36.06 × 36.06	2288 × 916 × 916	47.03	1195	38.12	968	4	45

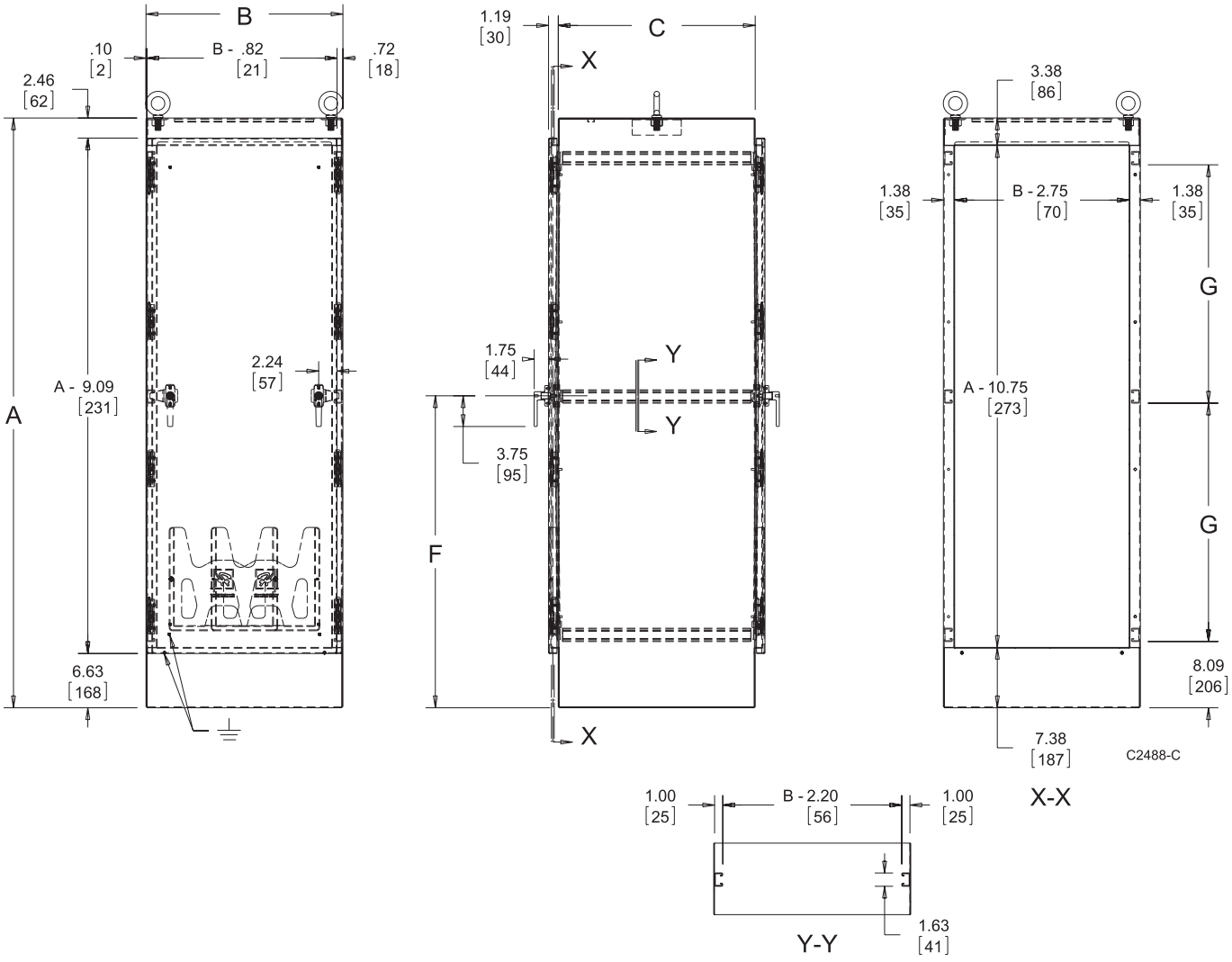

STANDARD PRODUCT TWO-DOOR SINGLE-ACCESS

Part Number	A × B × C in	A × B × C mm	F in	F mm	G in	G mm	H in	H mm	J in	J mm	Number of Lifting Eyes	Number of Rack Units
A604818FSDG	60.06 × 48.06 × 18.06	1526 × 1221 × 459	32.03	814	23.12	587	19.88	505	20.03	509	2	28
A724818FSDG	72.06 × 48.06 × 18.06	1830 × 1221 × 459	38.03	966	29.12	740	23.88	607	24.03	610	2	35
A726018FSDG	72.06 × 60.06 × 18.06	1830 × 1526 × 459	38.03	966	29.12	740	23.88	607	24.03	610	2	35
A727218FSDG	72.06 × 72.06 × 18.06	1830 × 1830 × 459	38.03	966	29.12	740	23.88	607	24.03	610	2	35
A904820FSDG	90.06 × 48.06 × 20.06	2288 × 1221 × 510	47.03	1195	38.12	968	29.88	759	30.03	763	2	45
A907220FSDG	90.06 × 72.06 × 20.06	2288 × 1830 × 510	47.03	1195	38.12	968	29.88	759	30.03	763	2	45
A724824FSDG	72.06 × 48.06 × 24.06	1830 × 1221 × 611	38.03	966	29.12	740	23.88	607	24.03	610	2	35
A726024FSDG	72.06 × 60.06 × 24.06	1830 × 1526 × 611	38.03	966	29.12	740	23.88	607	24.03	610	2	35
A727224FSDG	72.06 × 72.06 × 24.06	1830 × 1830 × 611	38.03	966	29.12	740	23.88	607	24.03	610	2	35
A907224FSDG	90.06 × 72.06 × 24.06	2288 × 1830 × 611	47.03	1195	38.12	968	29.88	759	30.03	763	2	45
A726036FSDG	72.06 × 60.06 × 36.06	1830 × 1526 × 916	38.03	966	29.12	740	23.88	607	24.03	610	4	35
A907236FSDG	90.06 × 72.06 × 36.06	2288 × 1830 × 916	47.03	1195	38.12	968	29.88	759	30.03	763	4	45

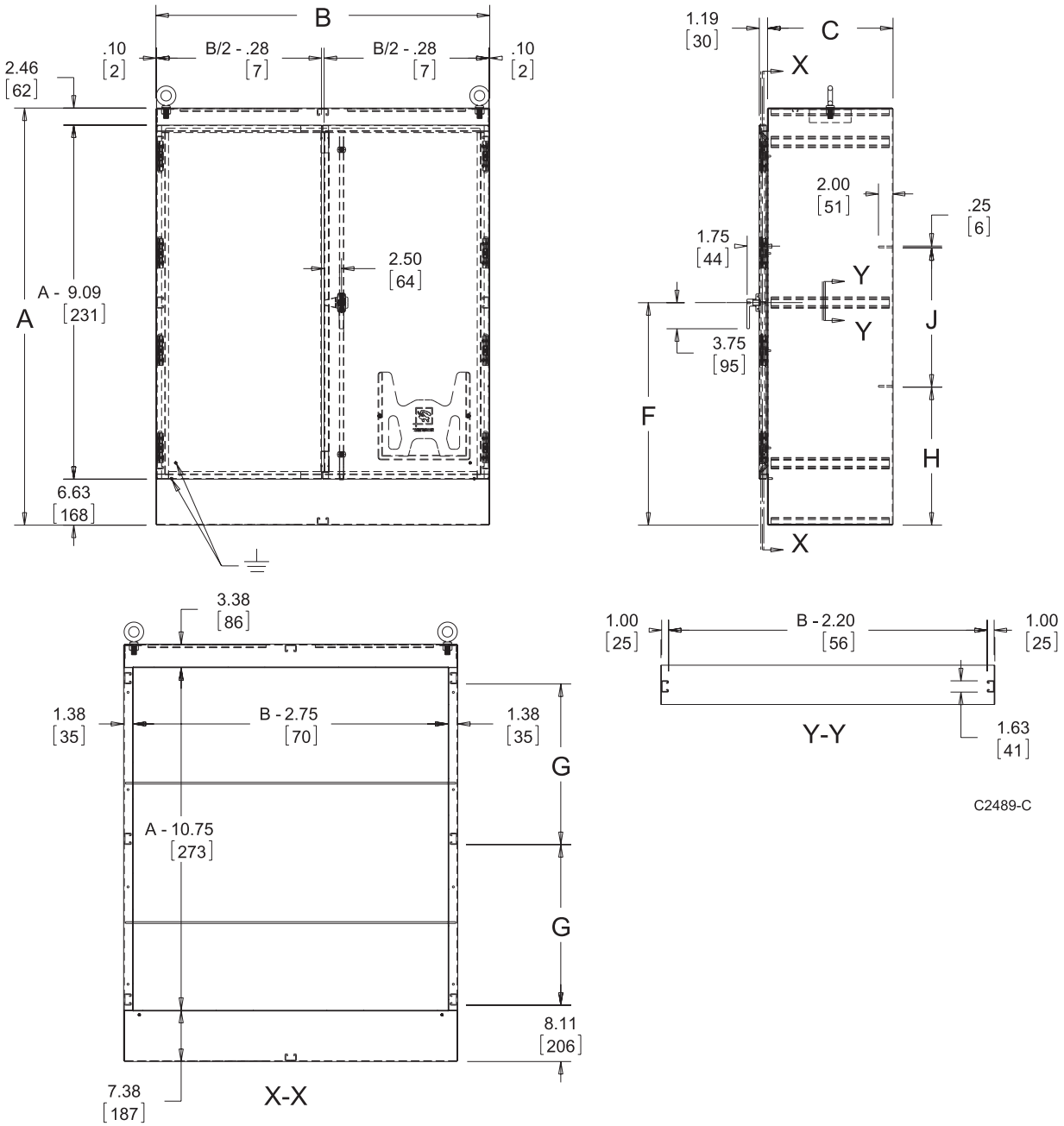

STANDARD PRODUCT TWO-DOOR DUAL-ACCESS

Part Number	A × B × C in	A × B × C mm	F in	F mm	G in	G mm	Number of Lifting Eyes	Number of Rack Units
A724824FSDADG	72.06 × 48.06 × 24.06	1830 × 1221 × 611	38.03	966	29.12	740	2	35
A726024FSDADG	72.06 × 60.06 × 24.06	1830 × 1526 × 611	38.03	966	29.12	740	2	35
A727224FSDADG	72.06 × 72.06 × 24.06	1830 × 1830 × 611	38.03	966	29.12	740	2	35
A726036FSDADG	72.06 × 60.06 × 36.06	1830 × 1526 × 916	38.03	966	29.12	740	4	35
A907224FSDADG	90.06 × 72.06 × 24.06	2288 × 1830 × 611	47.03	1195	38.12	968	2	45

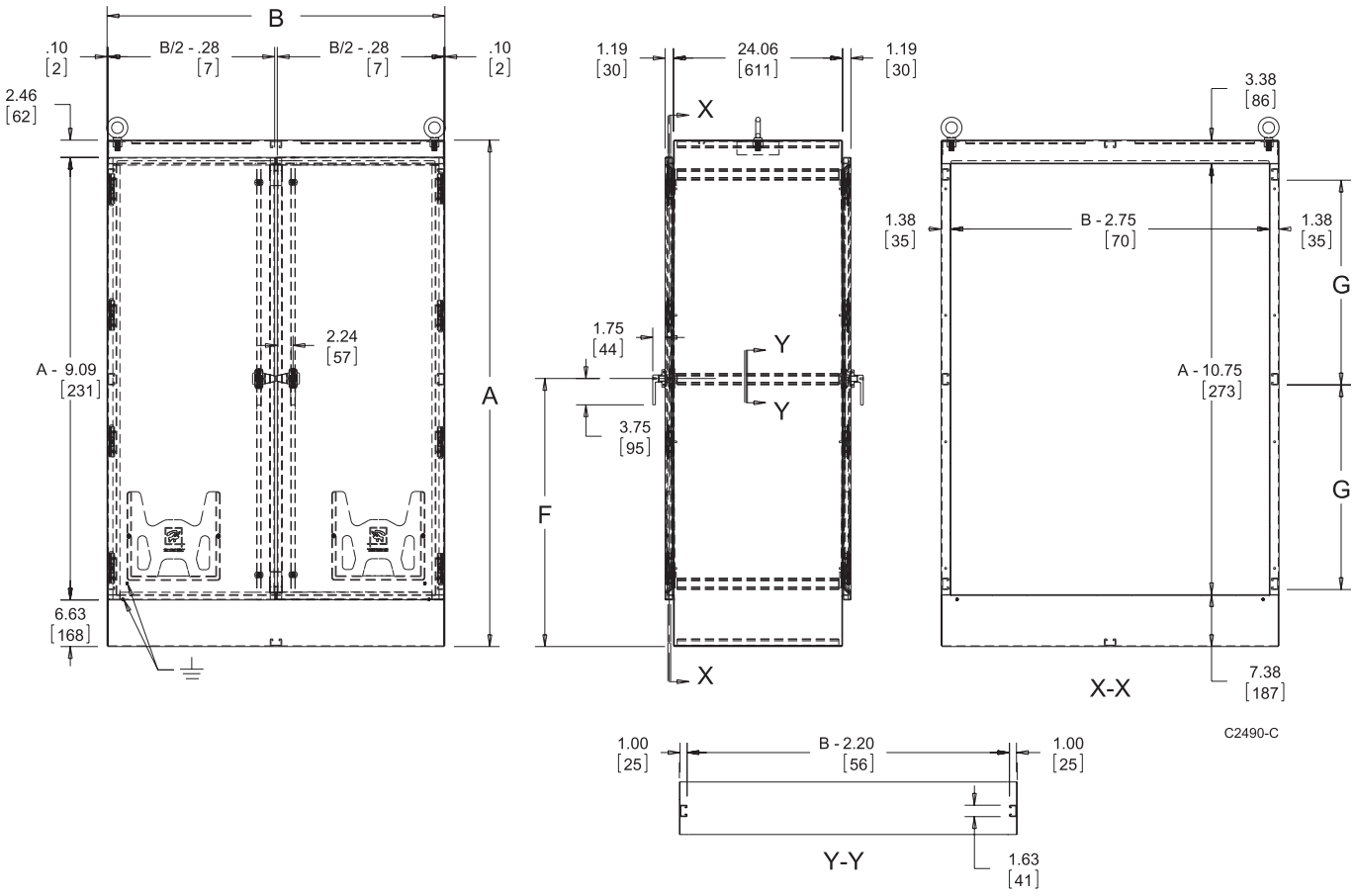

SEISMIC ACCESSORIES



To meet GR-63-CORE Zone 4 seismic standards, Free-Stand enclosures must include the following accessories (purchased separately):

For Seismic Free-Stand with Panel

- Seismic Mounting Plate Kit
- Seismic Panel Mounting Kit
- Panel, Full-Length

For Seismic Free-Stand with Rack Angles

- Seismic Mounting Plate Kit
- Rack Mounting Angles - L-Style (Type RP), Full

SEISMIC MOUNTING PLATE KITS



Kit of six (6) stainless steel mounting plates install over the mounting holes in the base of the enclosure. The mounting plates come predrilled to accept 1/2 in, 5/8 in or 3/4 in diameter mounting hardware (not included). Plate dimensions are 3.75 × 3.75 × .25 in (95 × 95 × 6 mm).

BULLETIN: DCY

Standard Product

Part Number	Description	Anchor Size
ASMP12SS	Seismic Mounting Plate, 1/2 in	1/2 in
ASMP58SS	Seismic Mounting Plate, 5/8 in	5/8 in
ASMP34SS	Seismic Mounting Plate, 3/4 in	3/4 in

SEISMIC PANEL MOUNTING KITS



Kit of two (2) panel supports install within the enclosure. Use mounting hardware furnished within these kits along with panel hardware to mount full panels.

BULLETIN: DCY

Standard Product

Part Number	Description	Fits Enclosure A in/mm
ASPANKIT60	Seismic Panel Mounting Kit, 60 in	60 1524
ASPANKIT72	Seismic Panel Mounting Kit, 72 in	72 1829
ASPANKIT90	Seismic Panel Mounting Kit, 90 in	90 2286



Full height panels are constructed of 12 gauge steel for one-door enclosures (<48-inches in width), or 11 gauge steel for two-door enclosures (48-inches or greater in width). Finished in white polyester paint or a conductive, corrosion resistant coating.

BULLETIN: PNL30

Standard Product

Part Number-Painted Finish	Part Number-Conductive Finish	Panel Size in/mm	Fits Enclosure A × B in/mm
A60P24F1	A60P24F1G	48.00 × 20.00 1219 × 508	60.00 × 24.00 1524 × 610
A72P24F1	A72P24F1G	60.00 × 20.00 1524 × 508	72.00 × 24.00 1829 × 610
A90P24F1	A90P24F1G	78.00 × 20.00 1981 × 508	90.00 × 24.00 2286 × 610
A72P30F1	A72P30F1G	60.00 × 26.00 1524 × 660	72.00 × 30.00 1829 × 762
A60P36F1	A60P36F1G	48.00 × 32.00 1219 × 813	60.00 × 36.00 1524 × 914
A72P36F1	A72P36F1G	60.00 × 32.00 1524 × 813	72.00 × 36.00 1829 × 914
A90P36F1	A90P36F1G	78.00 × 32.00 1981 × 813	90.00 × 36.00 2286 × 914
A60P48F1	A60P48F1G	48.00 × 42.00 1219 × 1118	60.00 × 48.00 1524 × 1219
A72P48F1	A72P48F1G	60.00 × 42.00 1524 × 1118	72.00 × 48.00 1829 × 1219
A90P48F1	A90P48F1G	78.00 × 42.00 1981 × 1118	90.00 × 48.00 2286 × 1219
A72P60F1	A72P60F1G	60.00 × 56.00 1524 × 1422	72.00 × 60.00 1829 × 1524
A72P72F1	A72P72F1G	60.00 × 68.00 1524 × 1727	72.00 × 72.00 1829 × 1829
A90P72F1	A90P72F1G	78.00 × 68.00 1981 × 1727	90.00 × 72.00 2286 × 1829

©2026 nVent. All nVent marks and logos are owned or licensed by nVent Services GmbH or its affiliates. All other trademarks are the property of their respective owners. nVent reserves the right to change specifications without notice.