

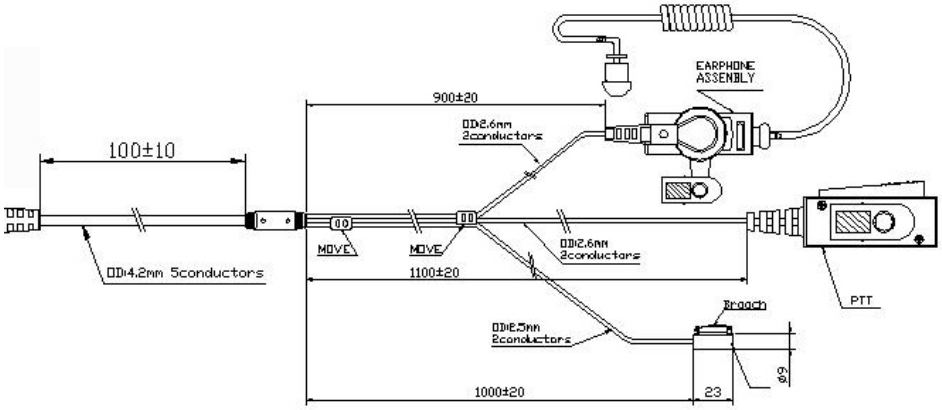

txPRO Professional Radio Accessories

Model: TX885K02

Specifications:	
Radio Brand	KENWOOD
Radio Model	TK-280/290/380/385/390/480/481/2041/21 40/3140/3148/218 0/3180,NX200/300

Speaker Specification:	
Type	Transducer Moving coil dynamic speaker
Impedance	90Ω±15% @1KHZ
Sensitivity	110±3dB @1KHZ
Frequency respond	(F0) 400HZ±20%
Rated input power	F0~5KHz
Maximum input power	500mW

Microphone Specification	
Sensitivity Range	-34 ± 2dB RL=2.2K ΩVs=3.0V (DC) 1KHz 0dB=1V/Pa
Impedance Max	2.2KΩ 1kHz (RL=2.2KΩ)
Frequency	20-20KHz
Current Consumption Max	0.5uA RL=2.2KΩ Vs=3.0V(DC)
Operation Voltage Range	1.0V-10V (DC)
Max Sound pressure Level	115dB S.P.L