MICROPHONE / KEYPAD MICROPHONE

TXM9600

SERVICE MANUAL

© 2025-5 PRINTED IN CHINA

MIC TXM9600

TXM9600 Microphone





NO.	Icon	Function
1	PTT	Press the key to transmit
2	∧	Decrease volume or setting value
3	∨	Increase volume or setting value
4	MIC	Speak here during transmission
5	Indicate light	Indicate light will red during transmission
6	Number Key	Input channel number or DTMF dial out etc.
7	A/B	Exchange to the home screen and sub screen

PARTS LIST

TXM9600 (MD-9600 microphone) PCB List

Ref.No.	Parts Number	Items Name Description	Quantity	Destination
1	1201010491	0603/270K/J SMD Resistor	1.00	R8
2	1203160885	MD-9600-MIC-V1.2 PCB Board	1.00	
3	1201130029	2SC1623/L6/SOT-23 SMD Transistor	9.00	Q1, Q2, Q3, Q4, Q5, Q6, Q7, Q8, Q9
4	1201030721	3.20*1.60*1.00mm/AVX SMD CAP	2.00	C4 C5
5	1201010440	0603/22K/J SMD Resistor	1.00	R4
6	1201010467	0603/82K/J SMD Resistor	2.00	R2, R7
7	1201010367	0603/150R/J SMD Resistor	6.00	R22, R23, R24, R26。R27, R28
8	1201030435	0603/104P/K/X7R/50V/1.6*0.8*0.8mm CAP	1.00	C3
9	1201030366	0603/100P/J/COG/50V/1.6*0.8*0.8mm CAP	2.00	C1, C2
10	1201010381	0603/560R/J SMD Resistor	1.00	R25
11	1201010402	0603/2.7K/J SMD Resistor	1.00	R21
12	1201030411	0603/103P/K/X7R/50V/1.6*0.8*0.8mm CAP	1.00	C6
13	1201090026	0603/MA2S111 SMD Diode	2.00	D1, D2
14	1201110011	0603/LED-R/Red SMD Diode	1.00	D9
15	1201010444	0603/27K/J SMD Resistor	1.00	R5
16	1201010487	0603/220K/J SMD Resistor	10.00	R1, R10, R11, R12, R13, R14, R15, R16, R17, R18
17	1201010364	0603/100R/J SMD Resistor	1.00	R19
18	1201110013	0603/LED-W/White SMD Diode	6.00	D3, D4, D5, D6, D7, D8
19	1201010452	0603/39K/J SMD Resistor	2.00	R3, R6
20	1201010385	0603/1.0K/J SMD Resistor	1.00	R9
21	1201010396	0603/2.0K/J SMD Resistor	1.00	R20

DISASSEMBLY FOR REPAIR

■ Main PCB removal

1. Remove the four screws, the rear case and all-round packing.
2. Lift the switch PCB and remove it from the front case.

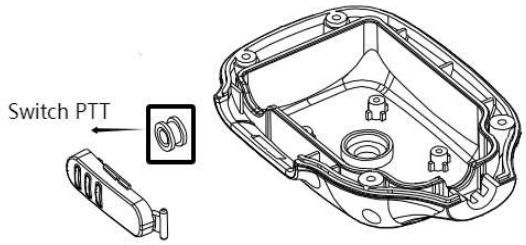

3. Remove the four screws which connected with the bottom of case.
4. Lift the upper part of the Main PCB using a pair of tweezers and remove the Main PCB.

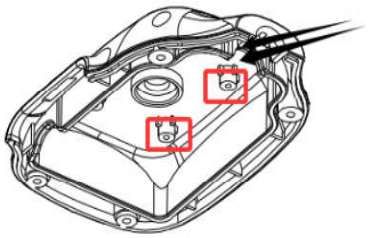



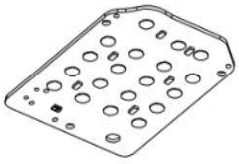

TXM-9600 MICPHONE

CIRCUIT DESCRIPTION

Microphone Function :

In radio communications, PTT microphone is a microphone with a push-to-talk function. Which is the user presses a button on the microphone to make the radio device start transmitting signals to talk with others. When the user releases the button, the radio device stops transmitting and returns to standby mode.

■ Circuit description :

■ Microphone keypad operation can be performed via J1 SW1/SW2 to inspection.

■ R24 5M is the power control

■ GND (ground) is the reference point in a circuit where voltage is considered zero. It's a common point for all components, ensuring a unified voltage level and allowing current to flow back to its source.

■ MIC,A microphone, or "mic," is a transducer that converts sound waves into electrical signals.

■ PTT , Push to talk transmitting pins.

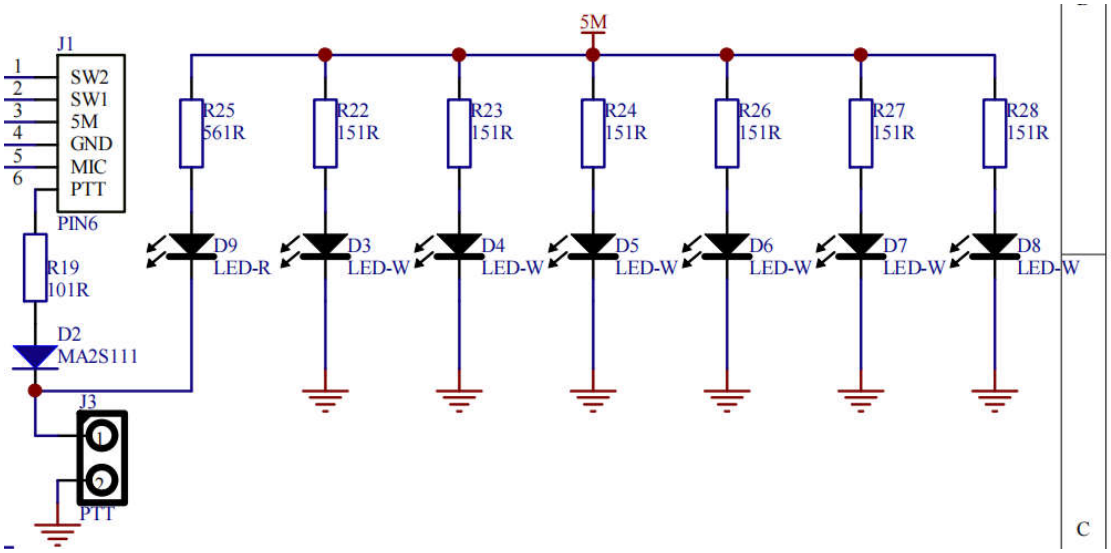

TXM-9600 MICROPHONE

EXPLODED VIEW

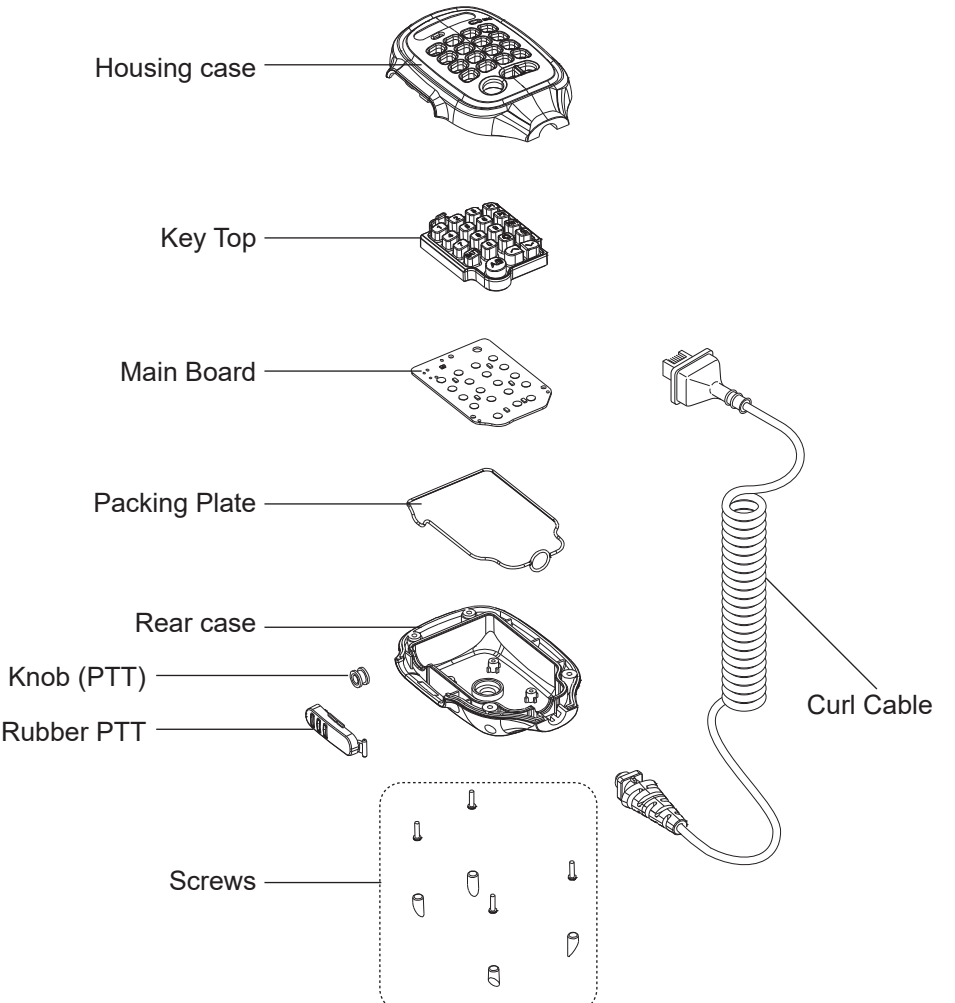
Housing case
Key Top
Main Board
Packing Plate
Rear case
Knob (PTT)
Rubber PTT
Screws
Curl Cable

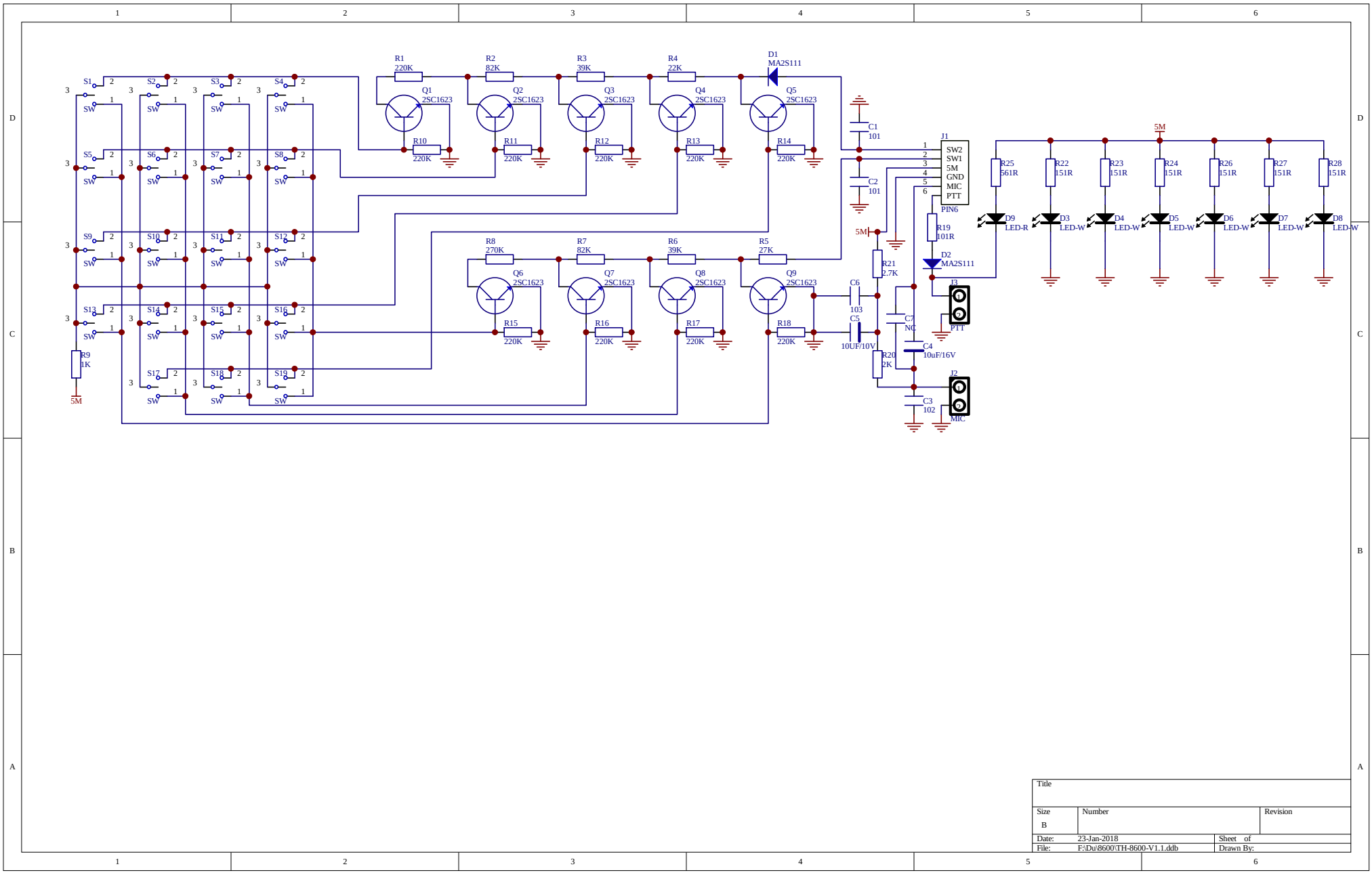

PDF 檔案使用 "pdfFactory Pro" 試用版本建立 www.pdffactory.com

TXM-9600 MICPHONE

SPECIFICATIONS

NO	Parameter	Symbol	Condition	limited			Unit
				Min.	Standard	Max.	
1	Dimension			Φ 6.0×2.7(H)			mm
2	Directivity			Omni directional			
3	Test condition			3.0V 2.2K Ω			
4	Sensitivity	S	f=1KHZ, 0dB=1V/Pa	-60	-58	-56	dB
5	Operating Volt			1		10	V
6	Output Impedance	ZOUT	F=1KHZ			2.2	K Ω
7	Current consumption	IDDS	Vc=3.0V , RL=2.2KΩ			500	uA
8	Signal Noise Ratio	S/N	f=1 KHZ , S.P.L=1Pa （A-Weighted）	60			dbA
9	Decreasing Voltage	△S-VS	Vc=3.0V to 1.5V			-3	dB
10	Input Sound Level					110	dB
11	Environmental Regulations		ROHS				
12	Operate Temperature		-25℃ ～ +70℃				
13	Humidity		35％～85％RH				
14	Vibration Test	1 minute frequency from 10Hz to 55Hz, amplitude 1.52mm, the vibration in three directions 2 hours					

MÉXICO: +52(614)415-2525

E-mail:ventas@syscom.mxwww.syscom.mx