

Side-Mount Filter Fans and Grilles

HF/HG Models

INSTRUCTION MANUAL

Rev. L
© 2019 nVent
P/N 89134973 89137856

TABLE OF CONTENTS

Installation Instructions 3
Wire Diagrams 5
How to Read Model Numbers 6
Filter Cleaning / Replacement 6
Replacement Parts 7
Warranty 7

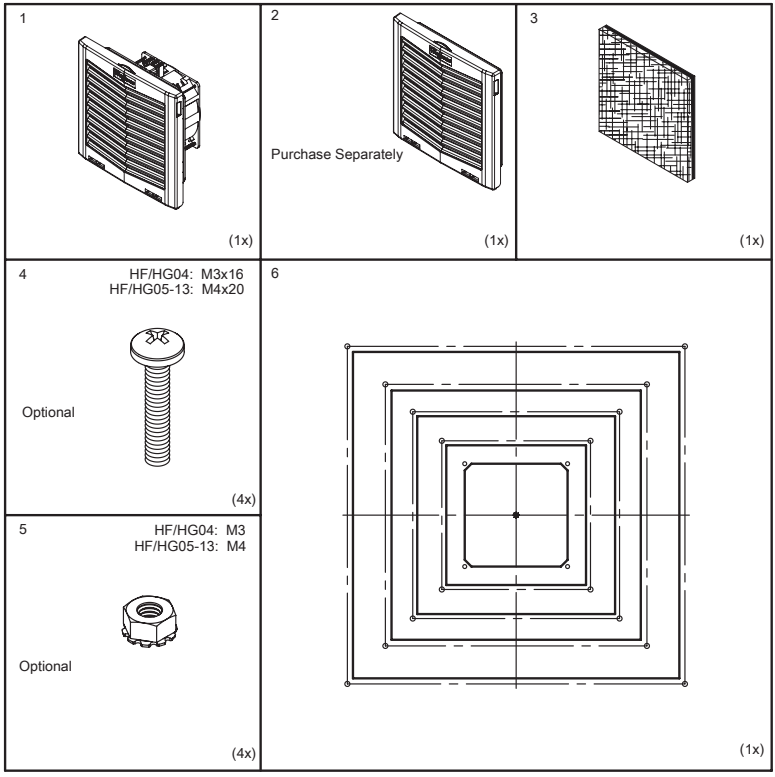

© 2019 nVent

⚠ CAUTION

Before cutting holes in the sides of the enclosure, verify all internal components are clear of the cutting tool to avoid damaging installed components.

INSTALLATION INSTRUCTIONS

1. Apply cutout template to the side of the enclosure located as desired. See Figure 1
2. Cutout hole in enclosure using the appropriate cutout size for the model you purchased.
3. Deburr the cutting edge.
4. Insert fan or grille and push into opening until **all four corners are snapped and locked**. See Figure 2.
5. Mounting fasteners are not required for panel or enclosure material thickness less than .10 (2.5 mm). For panel or enclosure material thickness between .10 (2.5 mm) and .14 (3.5 mm), mounting fasteners are recommended. For panel or enclosure material thickness greater than .14 (3.5 mm), mounting fasteners are required in order to maintain the IP / Type 12 rating.
6. In order to install the mounting fasteners, removal of the grille is required. Remove the grille by pulling from the top of the grille to 45° maximum as shown in Figure 3 on page 4. Then pull from the bottom as shown in Figure 4 on page 4.
   NOTE: The orientation "Top" directs the louvers downward. This is for reference only; the assembly can be installed to orient louvers in any direction.
7. It may be necessary to drill out the mounting holes in the filter housing. For model HF04, use a 1/8 (3 mm) drill bit. For models HF05, HF09, HF10 and HF13, use a 5/32 (4 mm) drill bit.
8. Torque fasteners to 20-25 in-lbs (2.3-2.8 Nm). See Figure 5 on page 4.
9. Install the grille as shown in Figure 2
10. Verify the location of the enclosure with installed filter fan has a minimum clearance of 7.00 (178 mm). See Figure 7 on page 4
11. Wire the filter fan following the Wire Diagrams on page 5 for the appropriate model being installed.

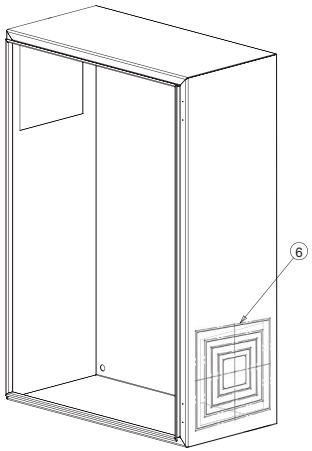

Figure 1

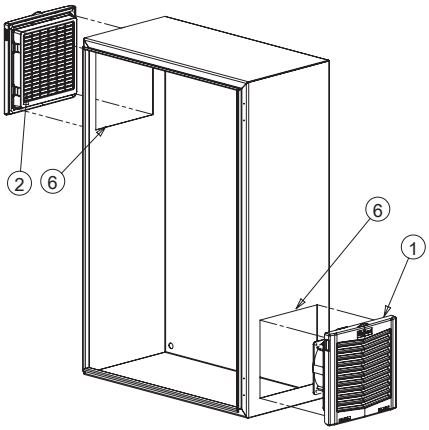

Figure 2

© 2019 nVent

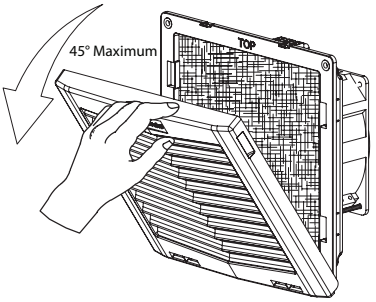

Figure 3

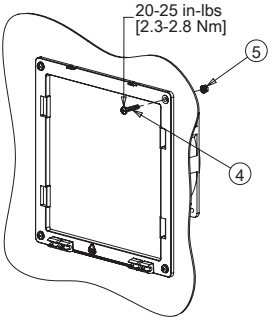

Figure 5

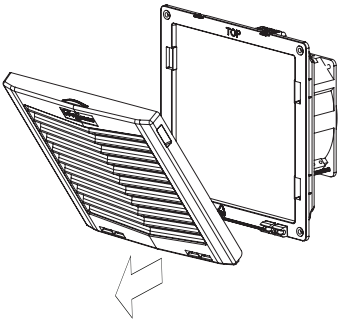

Figure 4

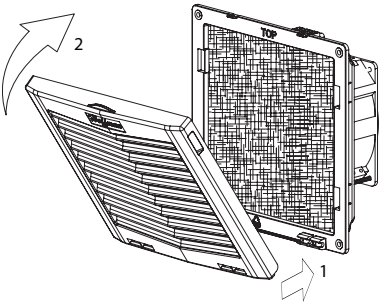

Figure 6

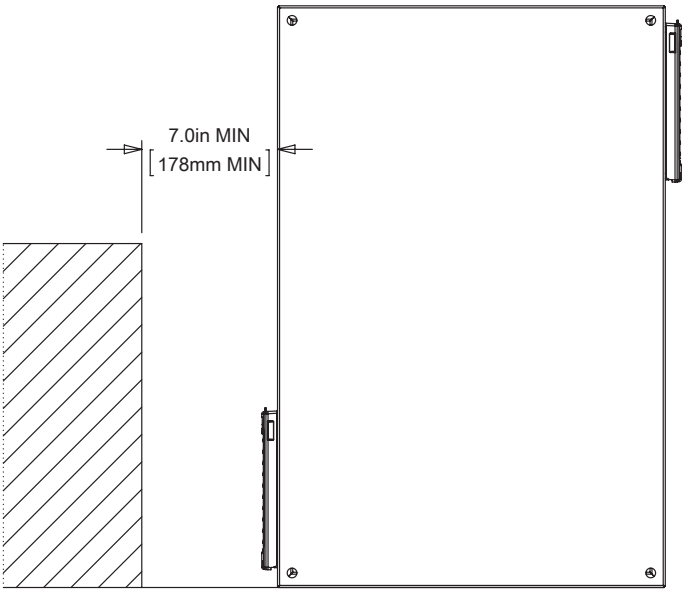

Figure 7

© 2019 nVent

WIRE DIAGRAMS

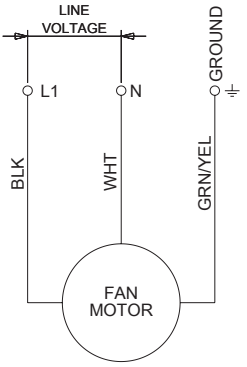

WIRING DIAGRAM
HF04, HF05, HF09, HF10
AC POWERED

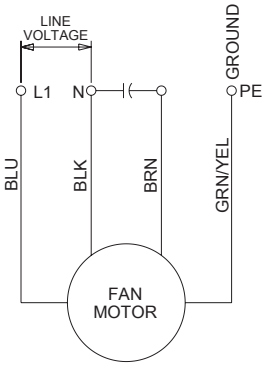

WIRING DIAGRAM
HF13
AC POWERED

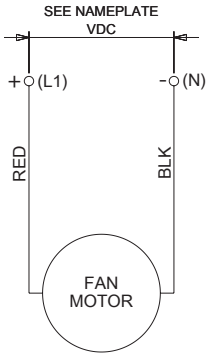

WIRING DIAGRAM
HF04, HF05, HF09, HF10
DC POWERED

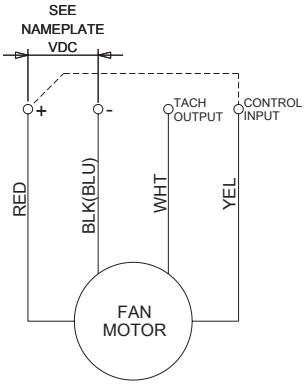

WIRING DIAGRAM
HF13 - FULL SPEED
DC POWERED

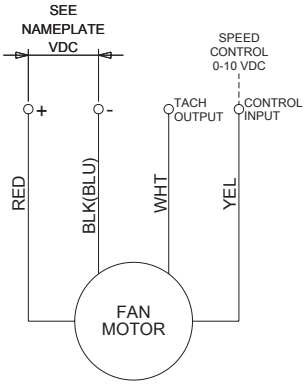

WIRING DIAGRAM
HF13 - VARIABLE SPEED
DC POWERED

© 2019 nVent

HOW TO READ MODEL NUMBERS

HF	04	16	4	0	4
1	2	3	4	5	6

1. Filter fan / Grille
2. Size
3. Voltage: 16 = AC 115/50/60/1
   26 = AC 230/50/60/1
   24 = DC 24V
   48 = DC 48V
4. IP Rating: 4 = IP54
   5 = IP55
5. Version
6. Color: 3 = RAL9011 Black
   4 = RAL = RAL7035 Light Gray

FILTER CLEANING / REPLACEMENT

Replacement Filter Part Numbers		
Fan/Grille Models	IP54 / Type 12 (≈ .50 [14 mm] thick)	IP55 / Type 12 (≈ .75 [20 mm] thick)
HF/HG04	89134423R	---
HF/HG05	89134424R	89136408R
HF/HG09	89134425R	89136409R
HF/HG10	89134426R	89136410R
HF/HG13	89134427R*	89136411R

***Note: HF/HG13 replacement filters are not approved for IP54; only Type 12.**

1. Open louvered grille.
2. Wash filter in warm water. Use mild detergent if necessary.
3. For greasy matter, wash in warm water containing a grease solvent.
4. Do not wring the filter.

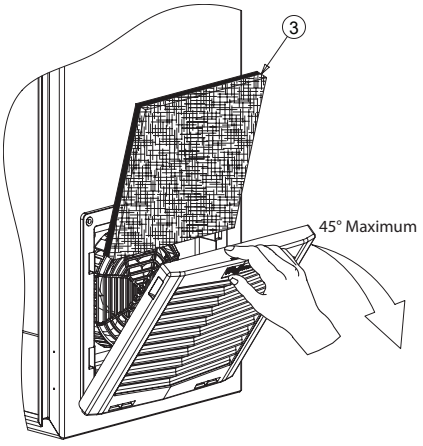

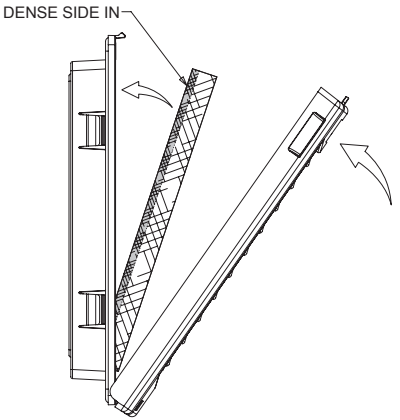

© 2019 nVent

REPLACEMENT PARTS

Model	RAL7035 Light Gray		RAL9011 Black	
	Grille	Housing	Grille	Housing
HF04	89123894SP	89133137SP	89131499SP	89133137SP
HF05	89122973SP	89133138SP	89131495SP	89133138SP
HF09	89122907SP	89133139SP	89131484SP	89133139SP
HF10	89123456SP	89133140SP	89131496SP	89133140SP
HF13	89124454SP	HG1300404	89131502SP	HG1300403
HG04	89123894SP	HG0400404	89131499SP	HG0400403
HG05	89122973SP	HG0500404	89131495SP	HG0500403
HG09	89122907SP	HG0900404	89131484SP	HG0900403
HG10	89123456SP	HG1000404	89131496SP	HG1000403
HG13	89124454SP	HG1300404	89131502SP	HG1300403

WARRANTY

Please register your product and reference the Hoffman Cooling Product Warranty located here: https://hoffman.nvent.com/en/hoffman/warranty-information

© 2019 nVent



nVent
2100 Hoffman Way
Anoka, MN 55303 USA
☎ +1.763.422.2211
+1.763.576.3200

nVent.com

Rev. L
© 2019 nVent
P/N 89134973 89137856