RSP Supply Inc. | https://www.rspsupply.com

nVent HOFFMAN

Concept

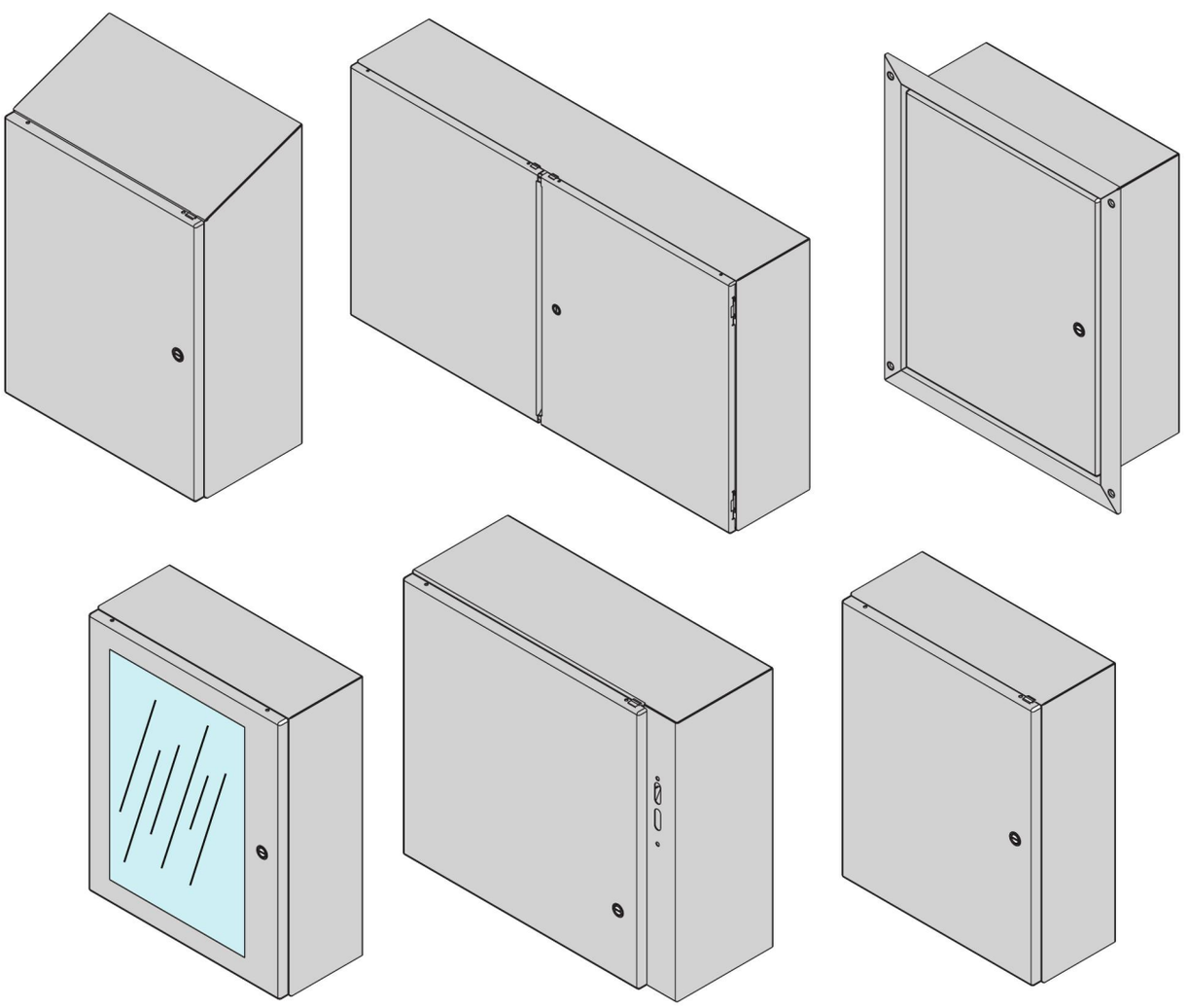

© 2018 Hoffman Enclosures Inc.

RSPSupply - 1-888-532-2706 - https://www.RSPSupply.com
See the product details here

1 M8X1.25  (4x) (8x)	2 3/8  (1x)	3 M6X1  (6x)
4 M6X1 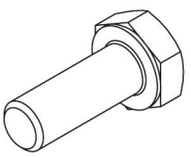 (2x)	5 3/8  (4x)	6 3/8 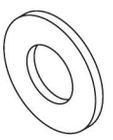 (4x)
7 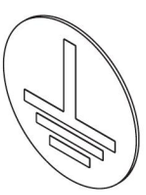 (2x)	8 1/2 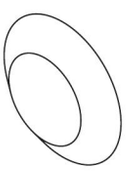 (4x)	9  (0x)

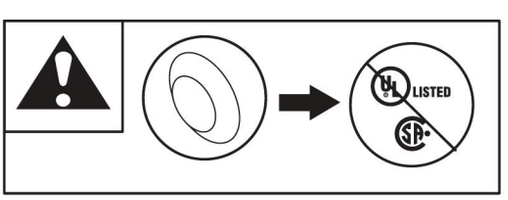

© 2018 Hoffman Enclosures Inc.

RSPSupply - 1-888-532-2706 - https://www.RSPSupply.com
See the product details here

RSP Supply Inc. | https://www.rspsupply.com

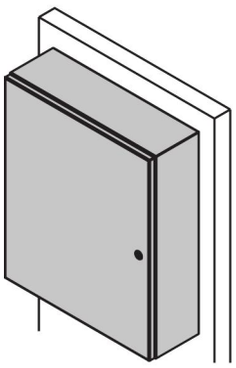

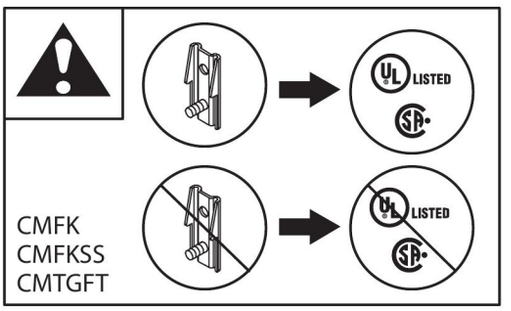

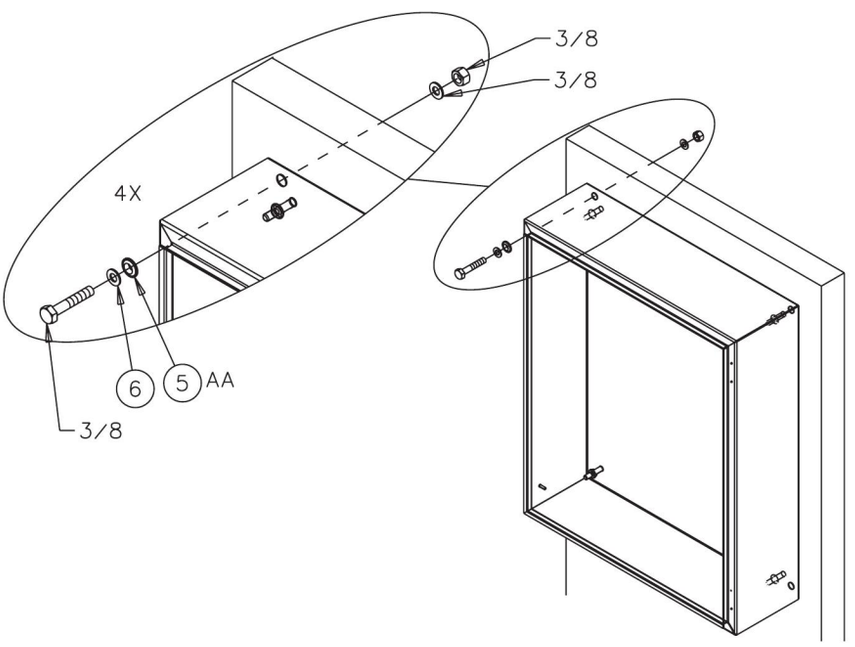

© 2018 Hoffman Enclosures Inc.

RSPSupply - 1-888-532-2706 - https://www.RSPSupply.com
See the product details here

RSP Supply Inc. | https://www.rspsupply.com

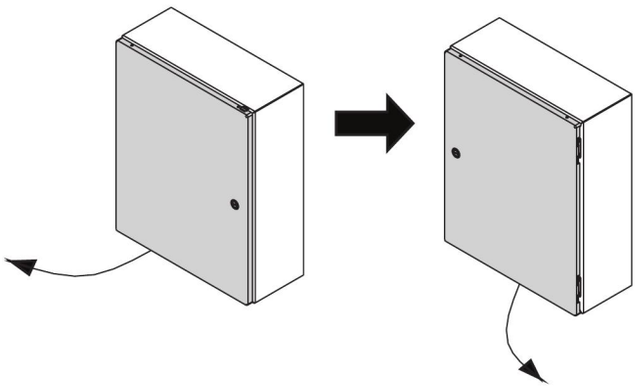

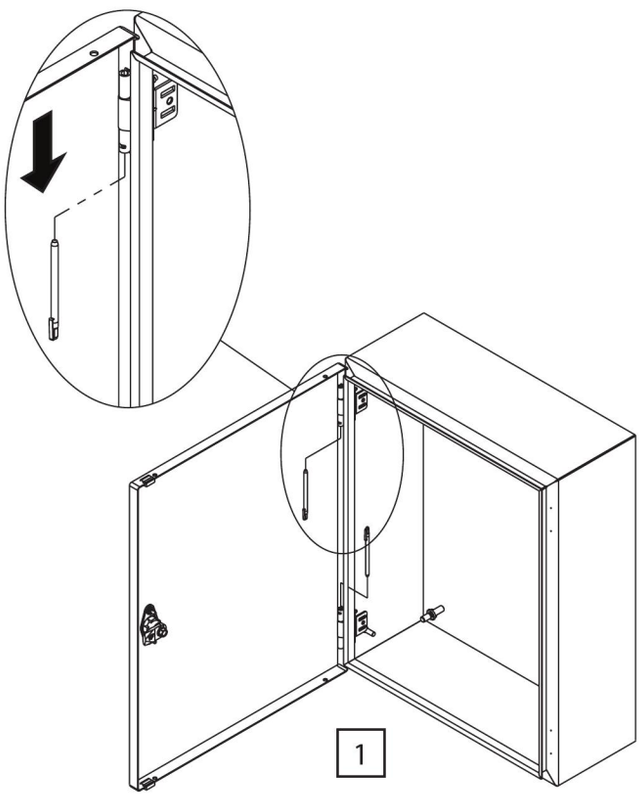

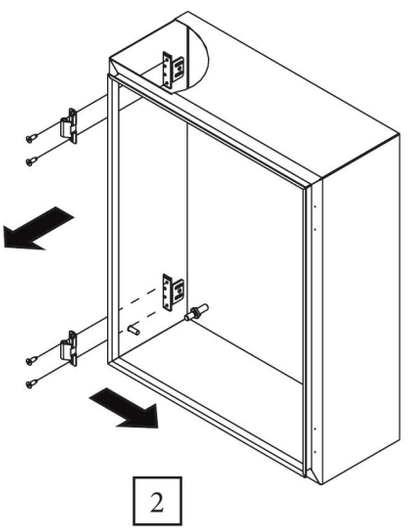

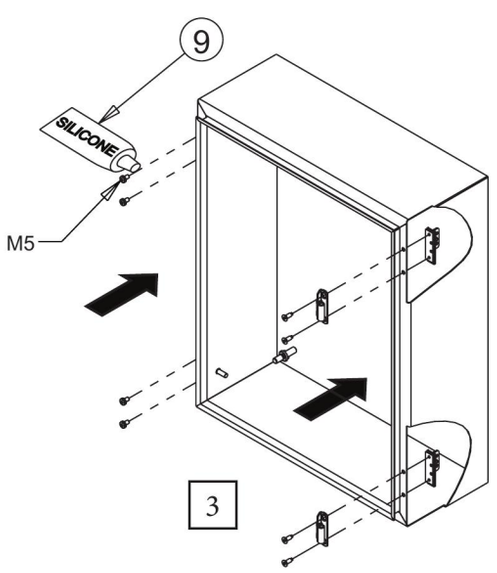

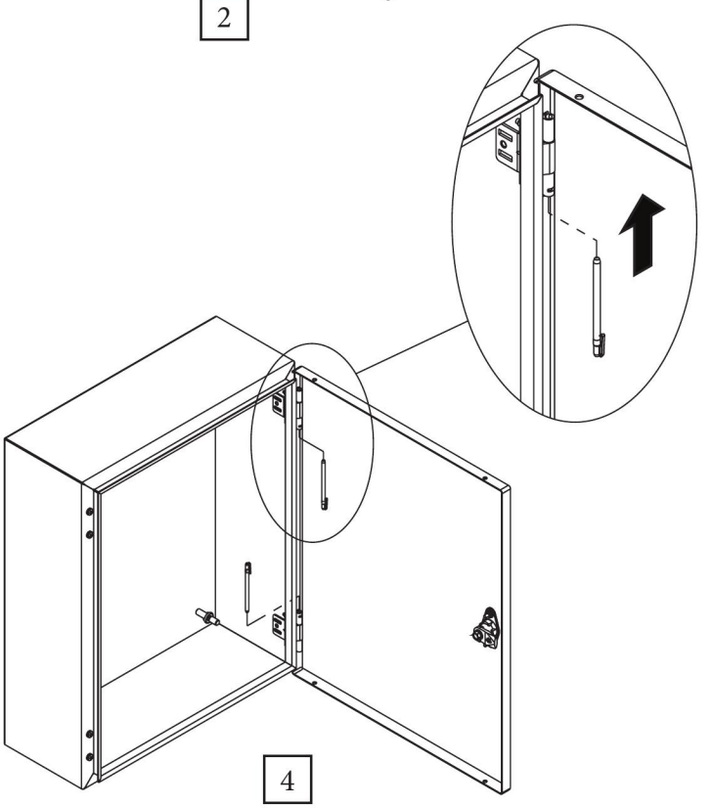

© 2018 Hoffman Enclosures Inc.

RSPSupply - 1-888-532-2706 - https://www.RSPSupply.com
See the product details here

RSP Supply Inc. | https://www.rspsupply.com

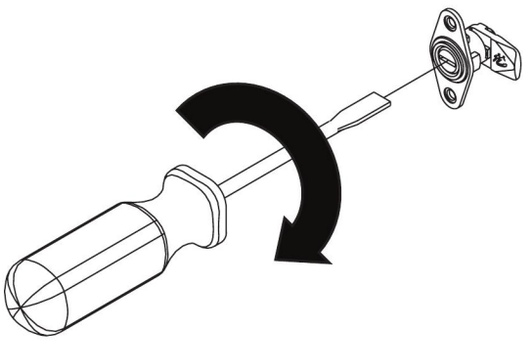

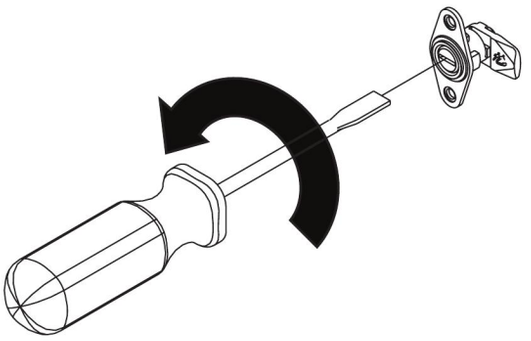

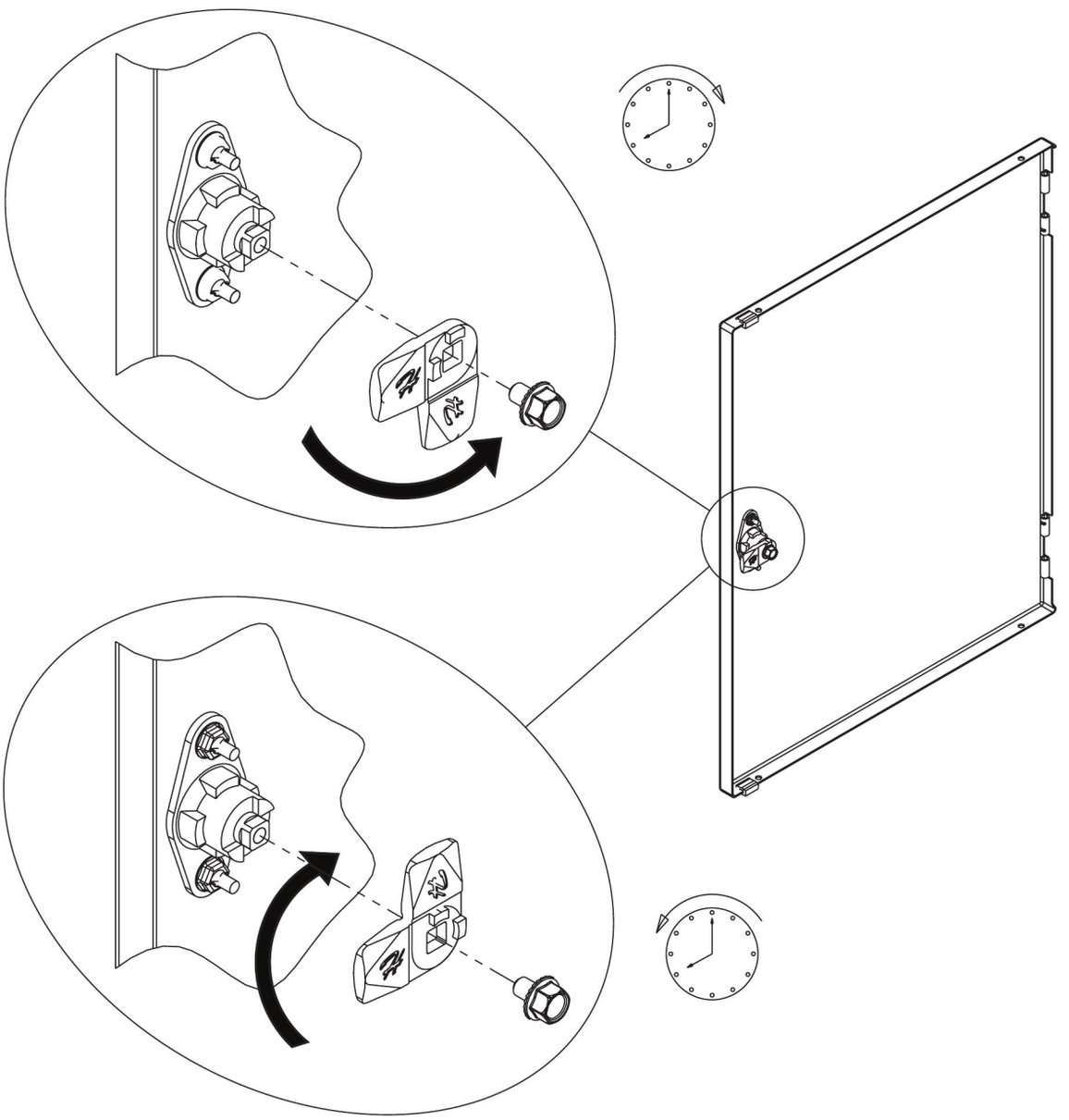

© 2018 Hoffman Enclosures Inc.

RSPSupply - 1-888-532-2706 - https://www.RSPSupply.com
See the product details here

RSP Supply Inc. | https://www.rspsupply.com

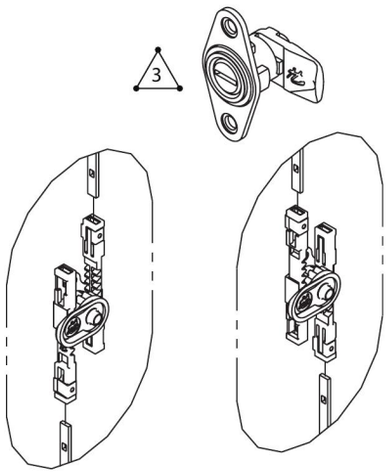

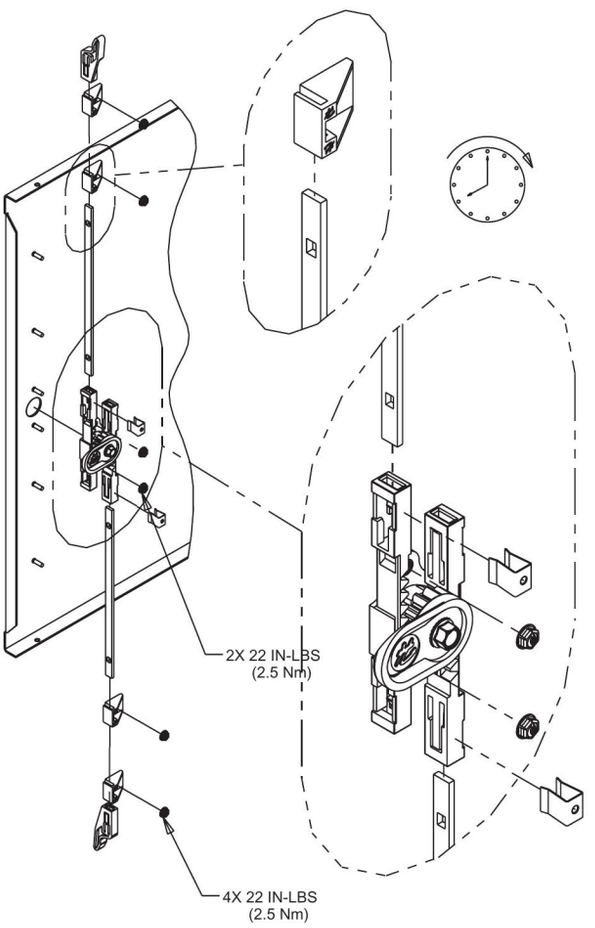

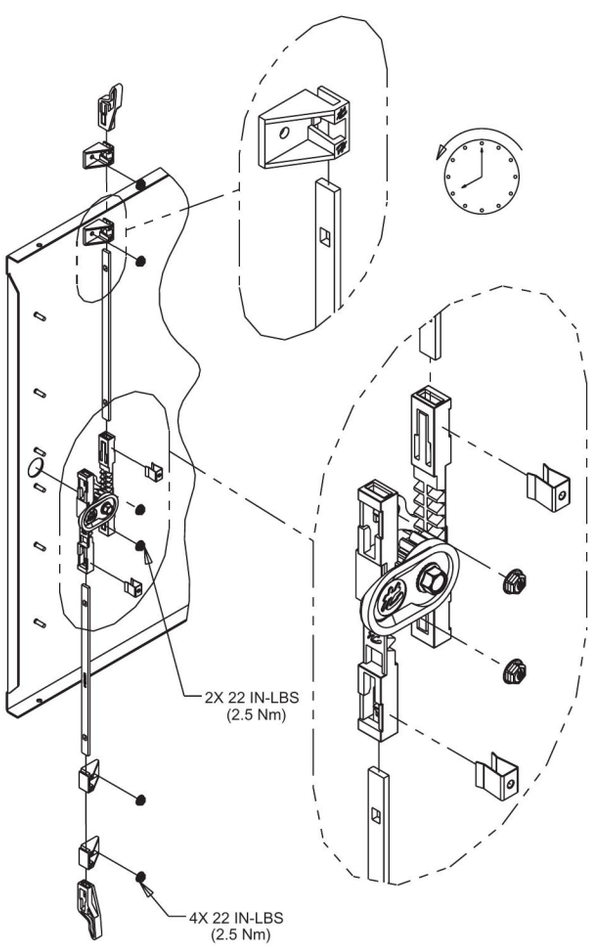

© 2018 Hoffman Enclosures Inc.

RSPSupply - 1-888-532-2706 - https://www.RSPSupply.com
See the product details here

RSP Supply Inc. | https://www.rspsupply.com

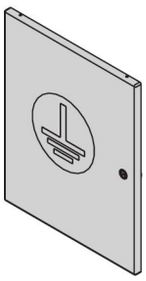

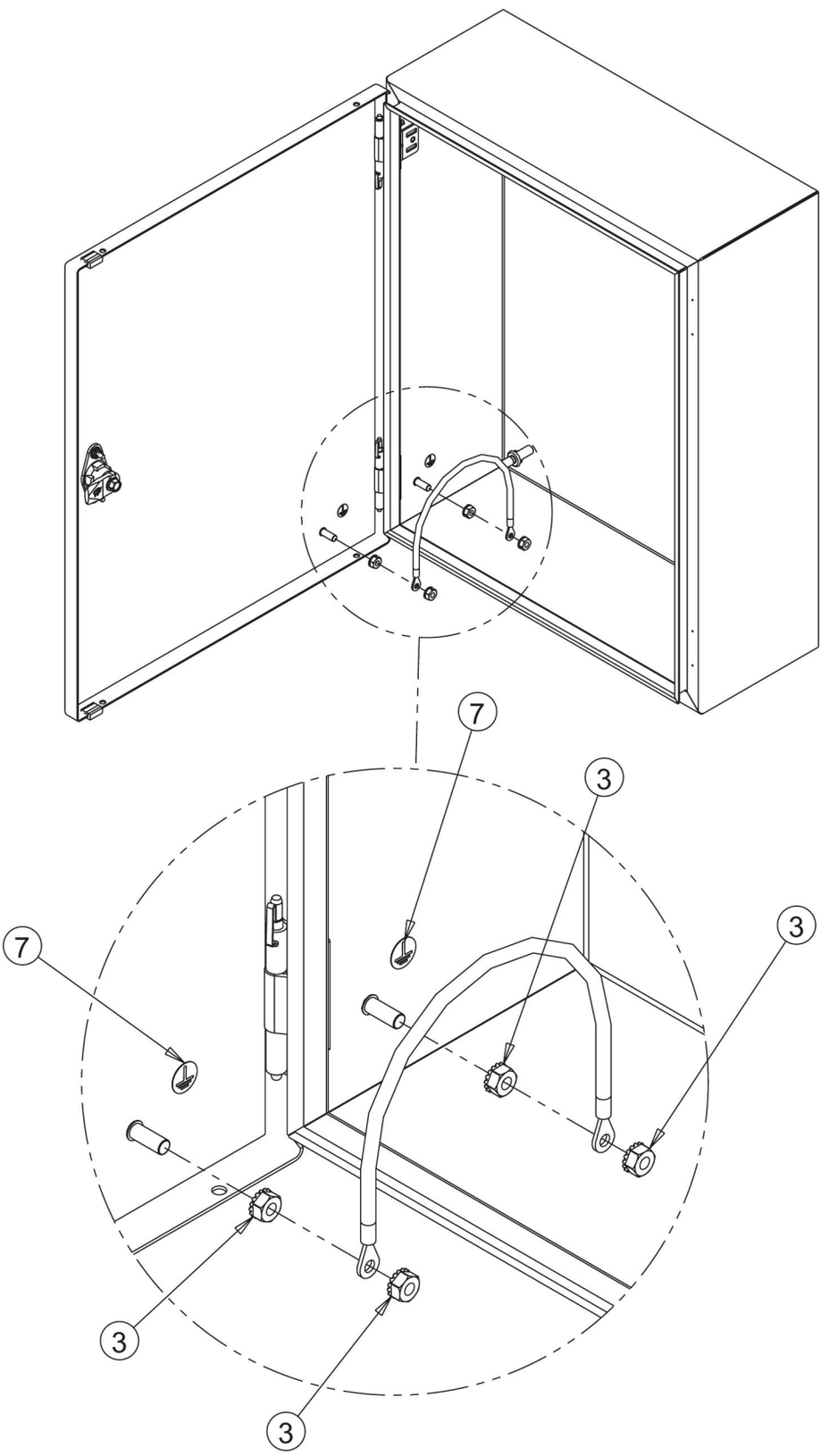

© 2018 Hoffman Enclosures Inc.

RSPSupply - 1-888-532-2706 - https://www.RSPSupply.com
See the product details here

RSP Supply Inc. | https://www.rspsupply.com

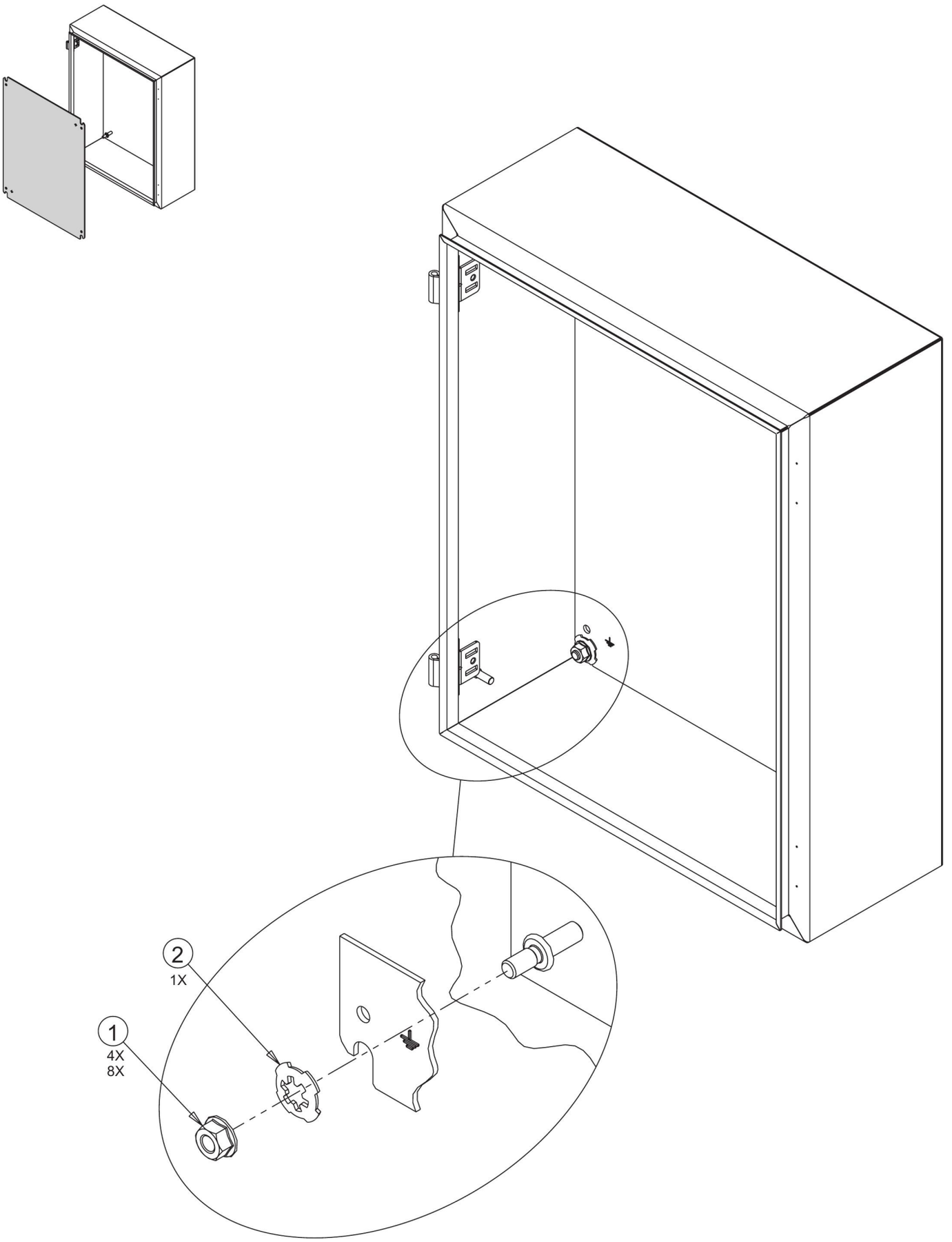

© 2018 Hoffman Enclosures Inc.

RSPSupply - 1-888-532-2706 - https://www.RSPSupply.com
See the product details here