RSP Supply Inc. | https://www.rspsupply.com

nVent | HOFFMAN

CONCEPT, TYPE 4 AND 12



INDUSTRY STANDARDS

Wall-mounting brackets required to maintain UL/CSA external mounting requirement.

Concept solid single-door, door with window and flush-mount models

UL 508A Listed; Type 4, 12; File No. E61997 cUL Listed per CSA C22.2 No. 94; Type 4, 12; File No. E61997

NEMA/EEMAC Type 4, 12, 13
CSA, File No. 42186: Type 4, 12
VDE IP66
IEC 60529, IP66

Concept two-door models

UL 508A Listed; Type 12; File No. E61997 cUL Listed per CSA C22.2 No. 94; Type 12; File No. E61997

NEMA/EEMAC Type 12
CSA, File No. 42186, Type 12
VDE IP 55
IEC 60529, IP55

APPLICATION

Concept Enclosures are ideal for machine control applications. With streamlined styling, flush quarter-turn latches and an attractive, durable finish. Available in solid or window single-door and two-door landscape, flush-mount and sloped-top versions for application and mounting flexibility. Two-door landscape models provide full-width access and easy panel installation.

SPECIFICATIONS

- 16 or 14 gauge steel
- Seams continuously welded and ground smooth
- Corner-formed doors
- Simple easy-to-remove and install hinge pins with captivation clip
- High-torque threadless studs and fasteners on door
- Minimum-width body flange provides maximum door opening
- Door opens 210 degrees
- External formed body flange
- Panel mounting studs fit optional CONCEPT panels and other accessories
- Mounting holes in back of body for direct mounting or optional external mounting brackets
- Removable door with hidden hinges for clean, aesthetic appearance
- Seamless foam-in-place gasket
- Quarter-turn slotted latch(es)
- Door alignment device on doors wider than 30 in.
- Four hinges on 60-in.-high enclosures
- Grounding stud on body; bonding provision on door (except window-door models)
- Provisions on door for optional high-impact thermoplastic data pocket
- Hardware kit with panel mounting nuts, panel grounding hardware and sealing washers
- Installation instructions provided

Single-Door and Window-Door Models:

- 3-point latch system on enclosures with height equal to or greater than 42-in. with quarter-turn, slotted latch

Flush-Mount Models:

- Mounting frame extends completely around enclosure

Two-Door Models:

- Overlapping door design provides full-width access
- Three-point latch system on right-hand hinged door with quarter-turn, slotted latch

FINISH

Two standard finishes are available: ANSI 61 gray or RAL 7035 textured light-gray polyester powder paint inside and out.

ACCESSORIES

Concept Panels
Door Stop Kit
Handles
Lock Inserts
Mounting-Bracket Kits
Padlock Insert
Padlock Handle
HF Side-Mount Filter Fans

MODIFICATION AND CUSTOMIZATION

Hoffman excels at modifying and customizing products to your specifications. Contact your local Hoffman sales office or distributor for complete information.

BULLETIN: CW1

RSPSupply - 1-888-532-2706 - https://www.RSPSupply.com
See the product details here

RSP Supply Inc. | https://www.rspsupply.com

nVent | HOFFMAN

Standard Product **Single-Door Enclosures**

Catalog Number	AxBxC in./mm	Finish	Door Ga.	Body Ga.	CONCEPT Panel	Conductive CONCEPT Panel	Panel Size D x E in./mm	Mounting G x H in./mm	Latches qty.	Latches style	J in./mm	K in./mm
CSD12106	12.00 x 10.00 x 6.00 305 x 254 x 152	ANSI 61 Gray	16	16	CP1210	CP1210G	10.20 x 8.20 259 x 208	10.50 x 8.50 267 x 216	1	Quarter-turn	6.00 152	1.45 37
CSD12106LG	12.00 x 10.00 x 6.00 305 x 254 x 152	RAL 7035 Lt. Gray	16	16	CP1210	CP1210G	10.20 x 8.20 259 x 208	10.50 x 8.50 267 x 216	1	Quarter-turn	6.00 152	1.45 37
CSD12126	12.00 x 12.00 x 6.00 305 x 305 x 152	ANSI 61 Gray	16	16	CP1212	CP1212G	10.20 x 10.20 259 x 259	10.50 x 10.50 267 x 267	1	Quarter-turn	6.00 152	1.45 37
CSD12126LG	12.00 x 12.00 x 6.00 305 x 305 x 152	RAL 7035 Lt. Gray	16	16	CP1212	CP1212G	10.20 x 10.20 259 x 259	10.50 x 10.50 267 x 267	1	Quarter-turn	6.00 152	1.45 37
CSD12246	12.00 x 24.00 x 6.00 305 x 610 x 152	ANSI 61 Gray	16	16	CP2412	CP2412G	22.20 x 10.20 564 x 259	10.50 x 22.50 267 x 572	1	Quarter-turn	6.00 152	1.45 37
CSD12246LG	12.00 x 24.00 x 6.00 305 x 610 x 152	RAL 7035 Lt. Gray	16	16	CP2412	CP2412G	22.20 x 10.20 564 x 259	10.50 x 22.50 267 x 572	1	Quarter-turn	6.00 152	1.45 37
CSD16126	16.00 x 12.00 x 6.00 406 x 305 x 152	ANSI 61 Gray	16	16	CP1612	CP1612G	14.20 x 10.20 361 x 259	14.50 x 10.50 368 x 267	1	Quarter-turn	8.00 203	1.45 37
CSD16126LG	16.00 x 12.00 x 6.00 406 x 305 x 152	RAL 7035 Lt. Gray	16	16	CP1612	CP1612G	14.20 x 10.20 361 x 259	14.50 x 10.50 368 x 267	1	Quarter-turn	8.00 203	1.45 37
CSD16166	16.00 x 16.00 x 6.00 406 x 406 x 152	ANSI 61 Gray	16	16	CP1616	CP1616G	14.20 x 14.20 361 x 361	14.50 x 14.50 368 x 368	1	Quarter-turn	8.00 203	1.45 37
CSD16166LG	16.00 x 16.00 x 6.00 406 x 406 x 152	RAL 7035 Lt. Gray	16	16	CP1616	CP1616G	14.20 x 14.20 361 x 361	14.50 x 14.50 368 x 368	1	Quarter-turn	8.00 203	1.45 37
CSD16206	16.00 x 20.00 x 6.00 406 x 508 x 152	ANSI 61 Gray	16	16	CP2016	CP2016G	18.20 x 14.20 462 x 361	14.50 x 18.50 368 x 470	1	Quarter-turn	8.00 203	1.45 37
CSD16206LG	16.00 x 20.00 x 6.00 406 x 508 x 152	RAL 7035 Lt. Gray	16	16	CP2016	CP2016G	18.20 x 14.20 462 x 361	14.50 x 18.50 368 x 470	1	Quarter-turn	8.00 203	1.45 37
CSD20126	20.00 x 12.00 x 6.00 508 x 305 x 152	ANSI 61 Gray	16	16	CP2012	CP2012G	18.20 x 10.20 462 x 259	18.50 x 10.50 470 x 267	1	Quarter-turn	10.00 254	1.45 37
CSD20126LG	20.00 x 12.00 x 6.00 508 x 305 x 152	RAL 7035 Lt. Gray	16	16	CP2012	CP2012G	18.20 x 10.20 462 x 259	18.50 x 10.50 470 x 267	1	Quarter-turn	10.00 254	1.45 37
CSD20166	20.00 x 16.00 x 6.00 508 x 406 x 152	ANSI 61 Gray	16	16	CP2016	CP2016G	18.20 x 14.20 462 x 361	18.50 x 14.50 470 x 368	1	Quarter-turn	10.00 254	1.45 37
CSD20166LG	20.00 x 16.00 x 6.00 508 x 406 x 152	RAL 7035 Lt. Gray	16	16	CP2016	CP2016G	18.20 x 14.20 462 x 361	18.50 x 14.50 470 x 368	1	Quarter-turn	10.00 254	1.45 37
CSD20206	20.00 x 20.00 x 6.00 508 x 508 x 152	ANSI 61 Gray	16	16	CP2020	CP2020G	18.20 x 18.20 462 x 462	18.50 x 18.50 470 x 470	1	Quarter-turn	10.00 254	1.45 37
CSD20206LG	20.00 x 20.00 x 6.00 508 x 508 x 152	RAL 7035 Lt. Gray	16	16	CP2020	CP2020G	18.20 x 18.20 462 x 462	18.50 x 18.50 470 x 470	1	Quarter-turn	10.00 254	1.45 37
CSD20246	20.00 x 24.00 x 6.00 508 x 610 x 152	ANSI 61 Gray	16	16	CP2420	CP2420G	22.20 x 18.20 564 x 462	18.50 x 22.50 570 x 572	1	Quarter-turn	10.00 254	1.45 37
CSD20246LG	20.00 x 24.00 x 6.00 508 x 610 x 152	RAL 7035 Lt. Gray	16	16	CP2420	CP2420G	22.20 x 18.20 564 x 462	18.50 x 22.50 570 x 572	1	Quarter-turn	10.00 254	1.45 37
CSD24126	24.00 x 12.00 x 6.00 610 x 305 x 152	ANSI 61 Gray	16	16	CP2412	CP2412G	22.20 x 10.20 564 x 259	22.50 x 10.50 572 x 267	1	Quarter-turn	12.00 305	1.45 37
CSD24126LG	24.00 x 12.00 x 6.00 610 x 305 x 152	RAL 7035 Lt. Gray	16	16	CP2412	CP2412G	22.20 x 10.20 564 x 259	22.50 x 10.50 572 x 267	1	Quarter-turn	12.00 305	1.45 37
CSD24166	24.00 x 16.00 x 6.00 610 x 406 x 152	ANSI 61 Gray	16	16	CP2416	CP2416G	22.20 x 14.20 564 x 361	22.50 x 14.50 572 x 368	1	Quarter-turn	12.00 305	1.45 37
CSD24166LG	24.00 x 16.00 x 6.00 610 x 406 x 152	RAL 7035 Lt. Gray	16	16	CP2416	CP2416G	22.20 x 14.20 564 x 361	22.50 x 14.50 572 x 368	1	Quarter-turn	12.00 305	1.45 37
CSD24206	24.00 x 20.00 x 6.00 610 x 508 x 152	ANSI 61 Gray	16	16	CP2420	CP2420G	22.20 x 18.20 564 x 462	22.50 x 18.50 572 x 470	1	Quarter-turn	12.00 305	1.45 37
CSD24206LG	24.00 x 20.00 x 6.00 610 x 508 x 152	RAL 7035 Lt. Gray	16	16	CP2420	CP2420G	22.20 x 18.20 564 x 462	22.50 x 18.50 572 x 470	1	Quarter-turn	12.00 305	1.45 37
CSD24246	24.00 x 24.00 x 6.00 610 x 610 x 152	ANSI 61 Gray	14	16	CP2424	CP2424G	22.20 x 22.20 564 x 564	22.50 x 22.50 572 x 572	2	Quarter-turn	5.00 127	1.45 37
CSD24246LG	24.00 x 24.00 x 6.00 610 x 610 x 152	RAL 7035 Lt. Gray	14	16	CP2424	CP2424G	22.20 x 22.20 564 x 564	22.50 x 22.50 572 x 572	2	Quarter-turn	5.00 127	1.45 37
CSD30166	30.00 x 16.00 x 6.00 762 x 406 x 152	ANSI 61 Gray	14	16	CP3016	CP3016G	28.20 x 14.20 716 x 361	28.50 x 14.50 724 x 368	2	Quarter-turn	5.00 127	1.45 37
CSD30166LG	30.00 x 16.00 x 6.00 762 x 406 x 152	RAL 7035 Lt. Gray	14	16	CP3016	CP3016G	28.20 x 14.20 716 x 361	28.50 x 14.50 724 x 368	2	Quarter-turn	5.00 127	1.45 37
CSD30206	30.00 x 20.00 x 6.00 762 x 508 x 152	ANSI 61 Gray	14	16	CP3020	CP3020G	28.20 x 18.20 716 x 462	28.50 x 18.50 724 x 470	2	Quarter-turn	5.00 127	1.45 37
CSD30206LG	30.00 x 20.00 x 6.00 762 x 508 x 152	RAL 7035 Lt. Gray	14	16	CP3020	CP3020G	28.20 x 18.20 716 x 462	28.50 x 18.50 724 x 470	2	Quarter-turn	5.00 127	1.45 37
CSD30246	30.00 x 24.00 x 6.00 762 x 610 x 152	ANSI 61 Gray	14	16	CP3024	CP3024G	28.20 x 22.20 869 x 564	28.50 x 22.50 876 x 572	2	Quarter-turn	5.00 127	1.45 37
CSD30246LG	30.00 x 24.00 x 6.00 762 x 610 x 152	RAL 7035 Lt. Gray	14	16	CP3024	CP3024G	28.20 x 22.20 869 x 564	28.50 x 22.50 876 x 572	2	Quarter-turn	5.00 127	1.45 37
CSD36246	36.00 x 24.00 x 6.00 914 x 610 x 152	ANSI 61 Gray	14	16	CP3624	CP3624G	34.20 x 22.20 869 x 564	34.50 x 22.50 876 x 572	2	Quarter-turn	5.00 127	1.45 37
CSD36246LG	36.00 x 24.00 x 6.00 914 x 610 x 152	RAL 7035 Lt. Gray	14	16	CP3624	CP3624G	34.20 x 22.20 869 x 564	34.50 x 22.50 876 x 572	2	Quarter-turn	5.00 127	1.45 37
CSD36306	36.00 x 30.00 x 6.00 914 x 762 x 152	ANSI 61 Gray	14	14	CP3630	CP3630G	34.20 x 28.20 869 x 716	34.50 x 28.50 876 x 724	2	Quarter-turn	5.00 127	1.45 37
CSD36306LG	36.00 x 30.00 x 6.00 914 x 762 x 152	RAL 7035 Lt. Gray	14	14	CP3630	CP3630G	34.20 x 28.20 869 x 716	34.50 x 28.50 876 x 724	2	Quarter-turn	5.00 127	1.45 37
CSD12248	12.00 x 24.00 x 8.00 305 x 610 x 203	ANSI 61 Gray	16	16	CP2412	CP2412G	22.20 x 10.20 564 x 259	10.50 x 22.50 267 x 572	1	Quarter-turn	6.00 152	1.45 37
CSD12248LG	12.00 x 24.00 x 8.00 305 x 610 x 203	RAL 7035 Lt. Gray	16	16	CP2412	CP2412G	22.20 x 10.20 564 x 259	10.50 x 22.50 267 x 572	1	Quarter-turn	6.00 152	1.45 37
CSD16128	16.00 x 12.00 x 8.00 406 x 305 x 203	ANSI 61 Gray	16	16	CP1612	CP1612G	14.20 x 10.20 361 x 259	14.50 x 10.50 368 x 267	1	Quarter-turn	8.00 203	1.45 37

RSPSupply - 1-888-532-2706 - https://www.RSPSupply.com
See the product details here

RSP Supply Inc. | https://www.rspsupply.com

Catalog Number	AxBxC in./mm	Finish	Door Ga.	Body Ga.	CONCEPT Panel	Conductive CONCEPT Panel	Panel Size D x E in./mm	Mounting G x H in./mm	Latches qty.	Latches style	J in./mm	K in./mm
CSD16128LG	16.00 x 12.00 x 8.00 406 x 305 x 203	RAL 7035 Lt. Gray	16	16	CP1612	CP1612G	14.20 x 10.20 361 x 259	14.50 x 10.50 368 x 267	1	Quarter-turn	8.00 203	1.45 37
CSD16168	16.00 x 16.00 x 8.00 406 x 406 x 203	ANSI 61 Gray	16	16	CP1616	CP1616G	14.20 x 14.20 361 x 361	14.50 x 14.50 368 x 368	1	Quarter-turn	8.00 203	1.45 37
CSD16168LG	16.00 x 16.00 x 8.00 406 x 406 x 203	RAL 7035 Lt. Gray	16	16	CP1616	CP1616G	14.20 x 14.20 361 x 361	14.50 x 14.50 368 x 368	1	Quarter-turn	8.00 203	1.45 37
CSD16208	16.00 x 20.00 x 8.00 406 x 508 x 203	ANSI 61 Gray	16	16	CP2016	CP2016G	18.20 x 14.20 462 x 361	14.50 x 18.50 368 x 470	1	Quarter-turn	8.00 203	1.45 37
CSD16208LG	16.00 x 20.00 x 8.00 406 x 508 x 203	RAL 7035 Lt. Gray	16	16	CP2016	CP2016G	18.20 x 14.20 462 x 361	14.50 x 18.50 368 x 470	1	Quarter-turn	8.00 203	1.45 37
CSD20128	20.00 x 12.00 x 8.00 508 x 305 x 203	ANSI 61 Gray	16	16	CP2012	CP2012G	18.20 x 10.20 462 x 259	18.50 x 10.50 470 x 267	1	Quarter-turn	10.00 254	1.45 37
CSD20128LG	20.00 x 12.00 x 8.00 508 x 305 x 203	RAL 7035 Lt. Gray	16	16	CP2012	CP2012G	18.20 x 10.20 462 x 259	18.50 x 10.50 470 x 267	1	Quarter-turn	10.00 254	1.45 37
CSD20168	20.00 x 16.00 x 8.00 508 x 406 x 203	ANSI 61 Gray	16	16	CP2016	CP2016G	18.20 x 14.20 462 x 361	18.50 x 14.50 470 x 368	1	Quarter-turn	10.00 254	1.45 37
CSD20168LG	20.00 x 16.00 x 8.00 508 x 406 x 203	RAL 7035 Lt. Gray	16	16	CP2016	CP2016G	18.20 x 14.20 462 x 361	18.50 x 14.50 470 x 368	1	Quarter-turn	10.00 254	1.45 37
CSD20208	20.00 x 20.00 x 8.00 508 x 508 x 203	ANSI 61 Gray	16	16	CP2020	CP2020G	18.20 x 18.20 462 x 462	18.50 x 18.50 470 x 470	1	Quarter-turn	10.00 254	1.45 37
CSD20208LG	20.00 x 20.00 x 8.00 508 x 508 x 203	RAL 7035 Lt. Gray	16	16	CP2020	CP2020G	18.20 x 18.20 462 x 462	18.50 x 18.50 470 x 470	1	Quarter-turn	10.00 254	1.45 37
CSD20248	20.00 x 24.00 x 8.00 508 x 610 x 203	ANSI 61 Gray	16	16	CP2420	CP2420G	22.20 x 18.20 564 x 462	18.50 x 22.50 470 x 572	1	Quarter-turn	10.00 254	1.45 37
CSD20248LG	20.00 x 24.00 x 8.00 508 x 610 x 203	RAL 7035 Lt. Gray	16	16	CP2420	CP2420G	22.20 x 18.20 564 x 462	18.50 x 22.50 470 x 572	1	Quarter-turn	10.00 254	1.45 37
CSD24128	24.00 x 12.00 x 8.00 610 x 305 x 203	ANSI 61 Gray	16	16	CP2412	CP2412G	22.20 x 10.20 564 x 259	22.50 x 10.50 572 x 267	1	Quarter-turn	12.00 305	1.45 37
CSD24128LG	24.00 x 12.00 x 8.00 610 x 305 x 203	RAL 7035 Lt. Gray	16	16	CP2412	CP2412G	22.20 x 10.20 564 x 259	22.50 x 10.50 572 x 267	1	Quarter-turn	12.00 305	1.45 37
CSD24168	24.00 x 16.00 x 8.00 610 x 406 x 203	ANSI 61 Gray	16	16	CP2416	CP2416G	22.20 x 14.20 564 x 361	22.50 x 14.50 572 x 368	1	Quarter-turn	12.00 305	1.45 37
CSD24168LG	24.00 x 16.00 x 8.00 610 x 406 x 203	RAL 7035 Lt. Gray	16	16	CP2416	CP2416G	22.20 x 14.20 564 x 361	22.50 x 14.50 572 x 368	1	Quarter-turn	12.00 305	1.45 37
CSD24208	24.00 x 20.00 x 8.00 610 x 508 x 203	ANSI 61 Gray	16	16	CP2420	CP2420G	22.20 x 18.20 564 x 462	22.50 x 18.50 572 x 470	1	Quarter-turn	12.00 305	1.45 37
CSD24208LG	24.00 x 20.00 x 8.00 610 x 508 x 203	RAL 7035 Lt. Gray	16	16	CP2420	CP2420G	22.20 x 18.20 564 x 462	22.50 x 18.50 572 x 470	1	Quarter-turn	12.00 305	1.45 37
CSD24248	24.00 x 24.00 x 8.00 610 x 610 x 203	ANSI 61 Gray	14	16	CP2424	CP2424G	22.20 x 22.20 564 x 564	22.50 x 22.50 572 x 572	2	Quarter-turn	5.00 127	1.45 37
CSD24248LG	24.00 x 24.00 x 8.00 610 x 610 x 203	RAL 7035 Lt. Gray	14	16	CP2424	CP2424G	22.20 x 22.20 564 x 564	22.50 x 22.50 572 x 572	2	Quarter-turn	5.00 127	1.45 37
CSD24308	24.00 x 30.00 x 8.00 610 x 762 x 203	ANSI 61 Gray	14	16	CP3024	CP3024G	28.20 x 22.20 716 x 564	22.50 x 28.50 572 x 724	2	Quarter-turn	5.00 127	1.45 37
CSD24308LG	24.00 x 30.00 x 8.00 610 x 762 x 203	RAL 7035 Lt. Gray	14	16	CP3024	CP3024G	28.20 x 22.20 716 x 564	22.50 x 28.50 572 x 724	2	Quarter-turn	5.00 127	1.45 37
CSD30128	30.00 x 12.00 x 8.00 762 x 305 x 203	ANSI 61 Gray	14	16	CP3012	CP3012G	28.20 x 10.20 716 x 259	28.50 x 10.50 724 x 267	2	Quarter-turn	5.00 127	1.45 37
CSD30128LG	30.00 x 12.00 x 8.00 762 x 305 x 203	RAL 7035 Lt. Gray	14	16	CP3012	CP3012G	28.20 x 10.20 716 x 259	28.50 x 10.50 724 x 267	2	Quarter-turn	5.00 127	1.45 37
CSD30168	30.00 x 16.00 x 8.00 762 x 406 x 203	ANSI 61 Gray	14	16	CP3016	CP3016G	28.20 x 14.20 716 x 361	28.50 x 14.50 724 x 368	2	Quarter-turn	5.00 127	1.45 37
CSD30168LG	30.00 x 16.00 x 8.00 762 x 406 x 203	RAL 7035 Lt. Gray	14	16	CP3016	CP3016G	28.20 x 14.20 716 x 361	28.50 x 14.50 724 x 368	2	Quarter-turn	5.00 127	1.45 37
CSD30208	30.00 x 20.00 x 8.00 762 x 508 x 203	ANSI 61 Gray	14	16	CP3020	CP3020G	28.20 x 18.20 716 x 462	28.50 x 18.50 724 x 470	2	Quarter-turn	5.00 127	1.45 37
CSD30208LG	30.00 x 20.00 x 8.00 762 x 508 x 203	RAL 7035 Lt. Gray	14	16	CP3020	CP3020G	28.20 x 18.20 716 x 462	28.50 x 18.50 724 x 470	2	Quarter-turn	5.00 127	1.45 37
CSD30248	30.00 x 24.00 x 8.00 762 x 610 x 203	ANSI 61 Gray	14	14	CP3024	CP3024G	28.20 x 22.20 716 x 564	28.50 x 22.50 724 x 572	2	Quarter-turn	5.00 127	1.45 37
CSD30248LG	30.00 x 24.00 x 8.00 762 x 610 x 203	RAL 7035 Lt. Gray	14	14	CP3024	CP3024G	28.20 x 22.20 716 x 564	28.50 x 22.50 724 x 572	2	Quarter-turn	5.00 127	1.45 37
CSD30308	30.00 x 30.00 x 8.00 762 x 762 x 203	ANSI 61 Gray	14	14	CP3030	CP3030G	28.20 x 28.20 716 x 716	28.50 x 28.50 724 x 724	2	Quarter-turn	5.00 127	1.45 37
CSD30308LG	30.00 x 30.00 x 8.00 762 x 762 x 203	RAL 7035 Lt. Gray	14	14	CP3030	CP3030G	28.20 x 28.20 716 x 716	28.50 x 28.50 724 x 724	2	Quarter-turn	5.00 127	1.45 37
CSD30368	30.00 x 36.00 x 8.00 762 x 914 x 203	ANSI 61 Gray	14	14	CP3630	CP3630G	34.20 x 28.20 869 x 716	28.50 x 34.50 724 x 876	2	Quarter-turn	5.00 127	1.45 37
CSD30368LG	30.00 x 36.00 x 8.00 762 x 914 x 203	RAL 7035 Lt. Gray	14	14	CP3630	CP3630G	34.20 x 28.20 869 x 716	28.50 x 34.50 724 x 876	2	Quarter-turn	5.00 127	1.45 37
CSD36248	36.00 x 24.00 x 8.00 914 x 610 x 203	ANSI 61 Gray	14	16	CP3624	CP3624G	34.20 x 22.20 869 x 564	34.50 x 22.50 876 x 572	2	Quarter-turn	5.00 127	1.45 37
CSD36248LG	36.00 x 24.00 x 8.00 914 x 610 x 203	RAL 7035 Lt. Gray	14	16	CP3624	CP3624G	34.20 x 22.20 869 x 564	34.50 x 22.50 876 x 572	2	Quarter-turn	5.00 127	1.45 37
CSD36308	36.00 x 30.00 x 8.00 914 x 762 x 203	ANSI 61 Gray	14	14	CP3630	CP3630G	34.20 x 28.20 869 x 716	34.50 x 28.50 876 x 724	2	Quarter-turn	5.00 127	1.45 37
CSD36308LG	36.00 x 30.00 x 8.00 914 x 762 x 203	RAL 7035 Lt. Gray	14	14	CP3630	CP3630G	34.20 x 28.20 869 x 716	34.50 x 28.50 876 x 724	2	Quarter-turn	5.00 127	1.45 37
CSD36368	36.00 x 36.00 x 8.00 914 x 914 x 203	ANSI 61 Gray	14	14	CP3636	CP3636G	34.20 x 34.20 869 x 869	34.50 x 34.50 876 x 876	2	Quarter-turn	5.00 127	1.45 37
CSD36368LG	36.00 x 36.00 x 8.00 914 x 914 x 203	RAL 7035 Lt. Gray	14	14	CP3636	CP3636G	34.20 x 34.20 869 x 869	34.50 x 34.50 876 x 876	2	Quarter-turn	5.00 127	1.45 37
CSD42248	42.00 x 24.00 x 8.00 1067 x 610 x 203	ANSI 61 Gray	14	14	CP2442	CP2442G	22.20 x 40.20 564 x 1021	40.50 x 22.50 1029 x 572	1	3-point	21.00 533	1.70 43

RSPSupply - 1-888-532-2706 - https://www.RSPSupply.com
See the product details here

RSP Supply Inc. | https://www.rspsupply.com

nVent | HOFFMAN

Catalog Number	AxBxC in./mm	Finish	Door Ga.	Body Ga.	CONCEPT Panel	Conductive CONCEPT Panel	Panel Size D x E in./mm	Mounting G x H in./mm	Latches qty.	Latches style	J in./mm	K in./mm
CSD42248LG	42.00 x 24.00 x 8.00 1067 x 610 x 203	RAL 7035 Lt. Gray	14	14	CP2442	CP2442G	22.20 x 40.20 564 x 1021	40.50 x 22.50 1029 x 572	1	3-point	21.00 533	1.70 43
CSD42308	42.00 x 30.00 x 8.00 1067 x 762 x 203	ANSI 61 Gray	14	14	CP4230	CP4230G	40.20 x 28.20 1021 x 716	40.50 x 28.50 1029 x 716	1	3-point	21.00 533	1.70 43
CSD42308LG	42.00 x 30.00 x 8.00 1067 x 762 x 203	RAL 7035 Lt. Gray	14	14	CP4230	CP4230G	40.20 x 28.20 1021 x 716	40.50 x 28.50 1029 x 716	1	3-point	21.00 533	1.70 43
CSD42368	42.00 x 36.00 x 8.00 1067 x 914 x 203	ANSI 61 Gray	14	14	CP4236	CP4236G	40.20 x 34.20 1021 x 869	40.50 x 34.50 1029 x 876	1	3-point	21.00 533	1.70 43
CSD42368LG	42.00 x 36.00 x 8.00 1067 x 914 x 203	RAL 7035 Lt. Gray	14	14	CP4236	CP4236G	40.20 x 34.20 1021 x 869	40.50 x 34.50 1029 x 876	1	3-point	21.00 533	1.70 43
CSD48248	48.00 x 24.00 x 8.00 1219 x 610 x 203	ANSI 61 Gray	14	14	CP4824	CP4824G	46.20 x 22.20 1174 x 564	46.50 x 22.50 1181 x 572	1	3-point	24.00 610	1.70 43
CSD48248LG	48.00 x 24.00 x 8.00 1219 x 610 x 203	RAL 7035 Lt. Gray	14	14	CP4824	CP4824G	46.20 x 22.20 1174 x 564	46.50 x 22.50 1181 x 572	1	3-point	24.00 610	1.70 43
CSD48308	48.00 x 30.00 x 8.00 1219 x 762 x 203	ANSI 61 Gray	14	14	CP3048	CP3048G	28.20 x 46.20 716 x 1174	46.50 x 28.50 1181 x 724	1	3-point	24.00 610	1.70 43
CSD48308LG	48.00 x 30.00 x 8.00 1219 x 762 x 203	RAL 7035 Lt. Gray	14	14	CP3048	CP3048G	28.20 x 46.20 716 x 1174	46.50 x 28.50 1181 x 724	1	3-point	24.00 610	1.70 43
CSD48368	48.00 x 36.00 x 8.00 1219 x 914 x 203	ANSI 61 Gray	14	14	CP4836	CP4836G	46.20 x 34.20 1174 x 876	46.50 x 34.50 1181 x 876	1	3-point	24.00 610	1.70 43
CSD48368LG	48.00 x 36.00 x 8.00 1219 x 914 x 203	RAL 7035 Lt. Gray	14	14	CP4836	CP4836G	46.20 x 34.20 1174 x 876	46.50 x 34.50 1181 x 876	1	3-point	24.00 610	1.70 43
CSD60368	60.00 x 36.00 x 8.00 1524 x 914 x 203	ANSI 61 Gray	14	14	CP6036	CP6036G	58.20 x 34.20 1478 x 869	58.50 x 34.50 1486 x 876	1	3-point	30.00 762	1.70 43
CSD60368LG	60.00 x 36.00 x 8.00 1524 x 914 x 203	RAL 7035 Lt. Gray	14	14	CP6036	CP6036G	58.20 x 34.20 1478 x 869	58.50 x 34.50 1486 x 876	1	3-point	30.00 762	1.70 43
CSD161210	16.00 x 12.00 x 10.00 406 x 305 x 254	ANSI 61 Gray	16	16	CP1612	CP1612G	14.20 x 10.20 361 x 259	14.50 x 10.50 368 x 267	1	Quarter-turn	8.00 203	1.45 37
CSD161210LG	16.00 x 12.00 x 10.00 406 x 305 x 254	ANSI 61 Gray	16	16	CP1612	CP1612G	14.20 x 10.20 361 x 259	14.50 x 10.50 368 x 267	1	Quarter-turn	8.00 203	1.45 37
CSD161610	16.00 x 16.00 x 10.00 406 x 406 x 254	RAL 7035 Lt. Gray	16	16	CP1616	CP1616G	14.20 x 14.20 361 x 361	14.50 x 14.50 368 x 368	1	Quarter-turn	8.00 203	1.45 37
CSD161610LG	16.00 x 16.00 x 10.00 406 x 406 x 254	RAL 7035 Lt. Gray	16	16	CP1616	CP1616G	14.20 x 14.20 361 x 361	14.50 x 14.50 368 x 368	1	Quarter-turn	8.00 203	1.45 37
CSD162010	16.00 x 20.00 x 10.00 406 x 508 x 254	ANSI 61 Gray	16	16	CP2016	CP2016G	18.20 x 14.20 462 x 361	14.50 x 18.50 368 x 470	1	Quarter-turn	8.00 203	1.45 37
CSD162010LG	16.00 x 20.00 x 10.00 406 x 508 x 254	RAL 7035 Lt. Gray	16	16	CP2016	CP2016G	18.20 x 14.20 462 x 361	14.50 x 18.50 368 x 470	1	Quarter-turn	8.00 203	1.45 37
CSD201610	20.00 x 16.00 x 10.00 508 x 406 x 254	ANSI 61 Gray	16	16	CP2016	CP2016G	18.20 x 14.20 462 x 361	18.50 x 14.50 470 x 368	1	Quarter-turn	10.00 254	1.45 37
CSD201610LG	20.00 x 16.00 x 10.00 508 x 406 x 254	RAL 7035 Lt. Gray	16	16	CP2016	CP2016G	18.20 x 14.20 462 x 361	18.50 x 14.50 470 x 368	1	Quarter-turn	10.00 254	1.45 37
CSD202010	20.00 x 20.00 x 10.00 508 x 508 x 254	ANSI 61 Gray	16	16	CP2020	CP2020G	18.20 x 18.20 462 x 462	18.50 x 18.50 470 x 470	1	Quarter-turn	10.00 254	1.45 37
CSD202010LG	20.00 x 20.00 x 10.00 508 x 508 x 254	RAL 7035 Lt. Gray	16	16	CP2020	CP2020G	18.20 x 18.20 462 x 462	18.50 x 18.50 470 x 470	1	Quarter-turn	10.00 254	1.45 37
CSD202410	20.00 x 24.00 x 10.00 508 x 610 x 254	ANSI 61 Gray	16	16	CP2420	CP2420G	22.20 x 18.20 564 x 462	18.50 x 22.50 470 x 572	1	Quarter-turn	10.00 254	1.45 37
CSD202410LG	20.00 x 24.00 x 10.00 508 x 610 x 254	RAL 7035 Lt. Gray	16	16	CP2420	CP2420G	22.20 x 18.20 564 x 462	18.50 x 22.50 470 x 572	1	Quarter-turn	10.00 254	1.45 37
CSD241210	24.00 x 12.00 x 10.00 610 x 305 x 254	ANSI 61 Gray	16	16	CP2412	CP2412G	22.20 x 10.20 564 x 259	22.50 x 10.50 572 x 267	1	Quarter-turn	12.00 305	1.45 37
CSD241210LG	24.00 x 12.00 x 10.00 610 x 305 x 254	RAL 7035 Lt. Gray	16	16	CP2412	CP2412G	22.20 x 10.20 564 x 259	22.50 x 10.50 572 x 267	1	Quarter-turn	12.00 305	1.45 37
CSD241610	24.00 x 16.00 x 10.00 610 x 406 x 254	ANSI 61 Gray	16	16	CP2416	CP2416G	22.20 x 14.20 564 x 361	22.50 x 14.50 572 x 368	1	Quarter-turn	12.00 305	1.45 37
CSD241610LG	24.00 x 16.00 x 10.00 610 x 406 x 254	RAL 7035 Lt. Gray	16	16	CP2416	CP2416G	22.20 x 14.20 564 x 361	22.50 x 14.50 572 x 368	1	Quarter-turn	12.00 305	1.45 37
CSD242010	24.00 x 20.00 x 10.00 610 x 508 x 254	ANSI 61 Gray	16	16	CP2420	CP2420G	22.20 x 18.20 564 x 462	22.50 x 18.50 572 x 470	1	Quarter-turn	12.00 305	1.45 37
CSD242010LG	24.00 x 20.00 x 10.00 610 x 508 x 254	RAL 7035 Lt. Gray	16	16	CP2420	CP2420G	22.20 x 18.20 564 x 462	22.50 x 18.50 572 x 470	1	Quarter-turn	12.00 305	1.45 37
CSD242410	24.00 x 24.00 x 10.00 610 x 610 x 254	ANSI 61 Gray	14	16	CP2424	CP2424G	22.20 x 22.20 564 x 564	22.50 x 22.50 572 x 572	2	Quarter-turn	5.00 127	1.45 37
CSD242410LG	24.00 x 24.00 x 10.00 610 x 610 x 254	RAL 7035 Lt. Gray	14	16	CP2424	CP2424G	22.20 x 22.20 564 x 564	22.50 x 22.50 572 x 572	2	Quarter-turn	5.00 127	1.45 37
CSD243010	24.00 x 30.00 x 10.00 610 x 762 x 254	ANSI 61 Gray	14	16	CP3024	CP3024G	28.20 x 22.20 716 x 564	22.50 x 28.50 572 x 724	2	Quarter-turn	5.00 127	1.45 37
CSD243010LG	24.00 x 30.00 x 10.00 610 x 762 x 254	RAL 7035 Lt. Gray	14	16	CP3024	CP3024G	28.20 x 22.20 716 x 564	22.50 x 28.50 572 x 724	2	Quarter-turn	5.00 127	1.45 37
CSD302010	30.00 x 20.00 x 10.00 762 x 508 x 254	ANSI 61 Gray	14	16	CP3020	CP3020G	28.20 x 18.20 716 x 462	28.50 x 18.50 724 x 470	2	Quarter-turn	5.00 127	1.45 37
CSD302010LG	30.00 x 20.00 x 10.00 762 x 508 x 254	RAL 7035 Lt. Gray	14	16	CP3020	CP3020G	28.20 x 18.20 716 x 462	28.50 x 18.50 724 x 470	2	Quarter-turn	5.00 127	1.45 37
CSD302410	30.00 x 24.00 x 10.00 762 x 610 x 254	ANSI 61 Gray	14	16	CP3024	CP3024G	28.20 x 22.20 716 x 564	28.50 x 22.50 724 x 572	2	Quarter-turn	5.00 127	1.45 37
CSD302410LG	30.00 x 24.00 x 10.00 762 x 610 x 254	RAL 7035 Lt. Gray	14	16	CP3024	CP3024G	28.20 x 22.20 716 x 564	28.50 x 22.50 724 x 572	2	Quarter-turn	5.00 127	1.45 37
CSD303010	30.00 x 30.00 x 10.00 762 x 762 x 254	ANSI 61 Gray	14	14	CP3030	CP3030G	28.20 x 28.20 716 x 716	28.50 x 28.50 724 x 724	2	Quarter-turn	5.00 127	1.45 37
CSD303010LG	30.00 x 30.00 x 10.00 762 x 762 x 254	RAL 7035 Lt. Gray	14	14	CP3030	CP3030G	28.20 x 28.20 716 x 716	28.50 x 28.50 724 x 724	2	Quarter-turn	5.00 127	1.45 37
CSD362410	36.00 x 24.00 x 10.00 914 x 610 x 254	ANSI 61 Gray	14	16	CP3624	CP3624G	34.20 x 22.20 869 x 564	34.50 x 22.50 876 x 572	2	Quarter-turn	5.00 127	1.45 37

RSPSupply - 1-888-532-2706 - https://www.RSPSupply.com
See the product details here

RSP Supply Inc. | https://www.rspsupply.com

Catalog Number	AxBxC in./mm	Finish	Door Ga.	Body Ga.	CONCEPT Panel	Conductive CONCEPT Panel	Panel Size D x E in./mm	Mounting G x H in./mm	Latches qty.	Latches style	J in./mm	K in./mm
CSD362410LG	36.00 x 24.00 x 10.00 914 x 610 x 254	RAL 7035 Lt. Gray	14	16	CP3624	CP3624G	34.20 x 22.20 869 x 564	34.50 x 22.50 876 x 572	2	Quarter-turn	5.00 127	1.45 37
CSD363010	36.00 x 30.00 x 10.00 914 x 762 x 254	ANSI 61 Gray	14	14	CP3630	CP3630G	34.20 x 28.20 869 x 716	34.50 x 28.50 876 x 724	2	Quarter-turn	5.00 127	1.45 37
CSD363010LG	36.00 x 30.00 x 10.00 914 x 762 x 254	RAL 7035 Lt. Gray	14	14	CP3630	CP3630G	34.20 x 28.20 869 x 716	34.50 x 28.50 876 x 724	2	Quarter-turn	5.00 127	1.45 37
CSD363610	36.00 x 36.00 x 10.00 914 x 914 x 254	ANSI 61 Gray	14	14	CP3636	CP3636G	34.20 x 34.20 869 x 869	34.50 x 34.50 876 x 876	2	Quarter-turn	5.00 127	1.45 37
CSD363610LG	36.00 x 36.00 x 10.00 914 x 914 x 254	RAL 7035 Lt. Gray	14	14	CP3636	CP3636G	34.20 x 34.20 869 x 869	34.50 x 34.50 876 x 876	2	Quarter-turn	5.00 127	1.45 37
CSD422410	42.00 x 24.00 x 10.00 1067 x 610 x 254	ANSI 61 Gray	14	14	CP2442	CP2442G	22.20 x 40.20 564 x 1021	40.50 x 22.50 1029 x 572	1	3-point	21.00 533	1.70 43
CSD422410LG	42.00 x 24.00 x 10.00 1067 x 610 x 254	RAL 7035 Lt. Gray	14	14	CP2442	CP2442G	22.20 x 40.20 564 x 1021	40.50 x 22.50 1029 x 572	1	3-point	21.00 533	1.70 43
CSD423010	42.00 x 30.00 x 10.00 1067 x 762 x 254	ANSI 61 Gray	14	14	CP4230	CP4230G	40.20 x 28.20 1021 x 716	40.50 x 28.50 1029 x 724	1	3-point	21.00 533	1.70 43
CSD423010LG	42.00 x 30.00 x 10.00 1067 x 762 x 254	RAL 7035 Lt. Gray	14	14	CP4230	CP4230G	40.20 x 28.20 1021 x 716	40.50 x 28.50 1029 x 724	1	3-point	21.00 533	1.70 43
CSD423610	42.00 x 36.00 x 10.00 1067 x 914 x 254	ANSI 61 Gray	14	14	CP4236	CP4236G	40.20 x 34.20 1021 x 869	40.50 x 34.50 1029 x 876	1	3-point	21.00 533	1.70 43
CSD423610LG	42.00 x 36.00 x 10.00 1067 x 914 x 254	RAL 7035 Lt. Gray	14	14	CP4236	CP4236G	40.20 x 34.20 1021 x 869	40.50 x 34.50 1029 x 876	1	3-point	21.00 533	1.70 43
CSD482410	48.00 x 24.00 x 10.00 1219 x 610 x 254	ANSI 61 Gray	14	14	CP4824	CP4824G	46.20 x 22.20 1173 x 564	46.50 x 22.50 1181 x 572	1	3-point	24.00 610	1.70 43
CSD482410LG	48.00 x 24.00 x 10.00 1219 x 610 x 254	RAL 7035 Lt. Gray	14	14	CP4824	CP4824G	46.20 x 22.20 1173 x 564	46.50 x 22.50 1181 x 572	1	3-point	24.00 610	1.70 43
CSD483010	48.00 x 30.00 x 10.00 1219 x 762 x 254	ANSI 61 Gray	14	14	CP3048	CP3048G	28.20 x 46.20 716 x 1174	46.50 x 28.50 1181 x 28.50	1	3-point	24.00 610	1.70 43
CSD483010LG	48.00 x 30.00 x 10.00 1219 x 762 x 254	RAL 7035 Lt. Gray	14	14	CP3048	CP3048G	28.20 x 46.20 716 x 1174	46.50 x 28.50 1181 x 28.50	1	3-point	24.00 610	1.70 43
CSD483610	48.00 x 36.00 x 10.00 1219 x 914 x 254	ANSI 61 Gray	14	14	CP4836	CP4836G	46.20 x 34.20 1173 x 869	46.50 x 34.50 1181 x 876	1	3-point	24.00 610	1.70 43
CSD483610LG	48.00 x 36.00 x 10.00 1219 x 914 x 254	RAL 7035 Lt. Gray	14	14	CP4836	CP4836G	46.20 x 34.20 1173 x 869	46.50 x 34.50 1181 x 876	1	3-point	24.00 610	1.70 43
CSD603610	60.00 x 36.00 x 10.00 1524 x 914 x 254	ANSI 61 Gray	14	14	CP6036	CP6036G	58.20 x 34.20 1478 x 869	58.50 x 34.50 1486 x 876	1	3-point	30.00 762	1.70 43
CSD603610LG	60.00 x 36.00 x 10.00 1524 x 914 x 254	RAL 7035 Lt. Gray	14	14	CP6036	CP6036G	58.20 x 34.20 1478 x 869	58.50 x 34.50 1486 x 876	1	3-point	30.00 762	1.70 43
CSD201612	20.00 x 16.00 x 12.00 508 x 406 x 305	ANSI 61 Gray	16	16	CP2016	CP2016G	18.20 x 14.20 462 x 361	18.50 x 14.50 470 x 1029	1	Quarter-turn	10.00 254	1.45 37
CSD201612LG	20.00 x 16.00 x 12.00 508 x 406 x 305	RAL 7035 Lt. Gray	16	16	CP2016	CP2016G	18.20 x 14.20 462 x 361	18.50 x 14.50 470 x 1029	1	Quarter-turn	10.00 254	1.45 37
CSD202012	20.00 x 20.00 x 12.00 508 x 508 x 305	ANSI 61 Gray	16	16	CP2020	CP2020G	18.20 x 18.20 462 x 462	18.50 x 18.50 470 x 470	1	Quarter-turn	10.00 254	1.45 37
CSD202012LG	20.00 x 20.00 x 12.00 508 x 508 x 305	RAL 7035 Lt. Gray	16	16	CP2020	CP2020G	18.20 x 18.20 462 x 462	18.50 x 18.50 470 x 470	1	Quarter-turn	10.00 254	1.45 37
CSD242012	24.00 x 20.00 x 12.00 610 x 508 x 305	ANSI 61 Gray	16	16	CP2420	CP2420G	22.20 x 18.20 564 x 462	22.50 x 18.50 572 x 470	1	Quarter-turn	12.00 305	1.45 37
CSD242012LG	24.00 x 20.00 x 12.00 610 x 508 x 305	RAL 7035 Lt. Gray	16	16	CP2420	CP2420G	22.20 x 18.20 564 x 462	22.50 x 18.50 572 x 470	1	Quarter-turn	12.00 305	1.45 37
CSD242412	24.00 x 24.00 x 12.00 610 x 610 x 305	ANSI 61 Gray	14	16	CP2424	CP2424G	22.20 x 22.20 564 x 564	22.50 x 22.50 572 x 572	2	Quarter-turn	5.00 127	1.45 37
CSD242412LG	24.00 x 24.00 x 12.00 610 x 610 x 305	RAL 7035 Lt. Gray	14	16	CP2424	CP2424G	22.20 x 22.20 564 x 564	22.50 x 22.50 572 x 572	2	Quarter-turn	5.00 127	1.45 37
CSD243012	24.00 x 30.00 x 12.00 610 x 762 x 305	ANSI 61 Gray	14	16	CP3024	CP3024G	28.20 x 22.20 716 x 564	22.50 x 28.50 572 x 724	2	Quarter-turn	5.00 127	1.45 37
CSD243012LG	24.00 x 30.00 x 12.00 610 x 762 x 305	RAL 7035 Lt. Gray	14	16	CP3024	CP3024G	28.20 x 22.20 716 x 564	22.50 x 28.50 572 x 724	2	Quarter-turn	5.00 127	1.45 37
CSD302412	30.00 x 24.00 x 12.00 762 x 610 x 305	ANSI 61 Gray	14	16	CP3024	CP3024G	28.20 x 22.20 716 x 564	28.50 x 22.50 724 x 572	2	Quarter-turn	5.00 127	1.45 37
CSD302412LG	30.00 x 24.00 x 12.00 762 x 610 x 305	RAL 7035 Lt. Gray	14	16	CP3024	CP3024G	28.20 x 22.20 716 x 564	28.50 x 22.50 724 x 572	2	Quarter-turn	5.00 127	1.45 37
CSD303012	30.00 x 30.00 x 12.00 762 x 762 x 305	ANSI 61 Gray	14	14	CP3030	CP3030G	28.20 x 28.20 716 x 716	28.50 x 28.50 724 x 724	2	Quarter-turn	5.00 127	1.45 37
CSD303012LG	30.00 x 30.00 x 12.00 762 x 762 x 305	RAL 7035 Lt. Gray	14	14	CP3030	CP3030G	28.20 x 28.20 716 x 716	28.50 x 28.50 724 x 724	2	Quarter-turn	5.00 127	1.45 37
CSD362412	36.00 x 24.00 x 12.00 914 x 610 x 305	ANSI 61 Gray	14	16	CP3624	CP3624G	34.20 x 22.20 869 x 564	34.50 x 22.50 876 x 572	2	Quarter-turn	5.00 127	1.45 37
CSD362412LG	36.00 x 24.00 x 12.00 914 x 610 x 305	RAL 7035 Lt. Gray	14	16	CP3624	CP3624G	34.20 x 22.20 869 x 564	34.50 x 22.50 876 x 572	2	Quarter-turn	5.00 127	1.45 37
CSD363012	36.00 x 30.00 x 12.00 914 x 762 x 305	ANSI 61 Gray	14	14	CP3630	CP3630G	34.20 x 28.20 869 x 716	34.50 x 28.50 876 x 724	2	Quarter-turn	5.00 127	1.45 37
CSD363012LG	36.00 x 30.00 x 12.00 914 x 762 x 305	RAL 7035 Lt. Gray	14	14	CP3630	CP3630G	34.20 x 28.20 869 x 716	34.50 x 28.50 876 x 724	2	Quarter-turn	5.00 127	1.45 37
CSD363612	36.00 x 36.00 x 12.00 914 x 914 x 305	ANSI 61 Gray	14	14	CP3636	CP3636G	34.20 x 34.20 869 x 869	34.50 x 34.50 876 x 876	2	Quarter-turn	5.00 127	1.45 37
CSD363612LG	36.00 x 36.00 x 12.00 914 x 914 x 305	RAL 7035 Lt. Gray	14	14	CP3636	CP3636G	34.20 x 34.20 869 x 869	34.50 x 34.50 876 x 876	2	Quarter-turn	5.00 127	1.45 37
CSD423012	42.00 x 30.00 x 12.00 1067 x 762 x 305	ANSI 61 Gray	14	14	CP4230	CP4230G	40.20 x 28.20 1021 x 716	40.50 x 28.50 1029 x 724	1	3-point	21.00 533	1.70 43
CSD423012LG	42.00 x 30.00 x 12.00 1067 x 762 x 305	RAL 7035 Lt. Gray	14	14	CP4230	CP4230G	40.20 x 28.20 1021 x 716	40.50 x 28.50 1029 x 724	1	3-point	21.00 533	1.70 43
CSD423612	42.00 x 36.00 x 12.00 1067 x 914 x 305	ANSI 61 Gray	14	14	CP4236	CP4236G	40.20 x 34.20 1021 x 869	40.50 x 34.50 1029 x 876	1	3-point	21.00 533	1.70 43

RSPSupply - 1-888-532-2706 - https://www.RSPSupply.com
See the product details here

RSP Supply Inc. | https://www.rspsupply.com

nVent | HOFFMAN

Catalog Number	AxBxC in./mm	Finish	Door Ga.	Body Ga.	CONCEPT Panel	Conductive CONCEPT Panel	Panel Size D x E in./mm	Mounting G x H in./mm	Latches qty.	Latches style	J in./mm	K in./mm
CSD423612LG	42.00 x 36.00 x 12.00 1067 x 914 x 305	RAL 7035 Lt. Gray	14	14	CP4236	CP4236G	40.20 x 34.20 1021 x 869	40.50 x 34.50 1029 x 876	1	3-point	21.00 533	1.70 43
CSD482412	48.00 x 24.00 x 12.00 1219 x 610 x 305	ANSI 61 Gray	14	14	CP4824	CP4824G	46.20 x 22.20 1173 x 564	46.50 x 22.50 1181 x 572	1	3-point	24.00 610	1.70 43
CSD482412LG	48.00 x 24.00 x 12.00 1219 x 610 x 305	RAL 7035 Lt. Gray	14	14	CP4824	CP4824G	46.20 x 22.20 1173 x 564	46.50 x 22.50 1181 x 572	1	3-point	24.00 610	1.70 43
CSD483612	48.00 x 36.00 x 12.00 1219 x 914 x 305	ANSI 61 Gray	14	14	CP4836	CP4836G	46.20 x 34.20 1173 x 869	46.50 x 34.50 1181 x 876	1	3-point	24.00 610	1.70 43
CSD483612LG	48.00 x 36.00 x 12.00 1219 x 914 x 305	RAL 7035 Lt. Gray	14	14	CP4836	CP4836G	46.20 x 34.20 1173 x 869	46.50 x 34.50 1181 x 876	1	3-point	24.00 610	1.70 43
CSD603612	60.00 x 36.00 x 12.00 1524 x 914 x 305	ANSI 61 Gray	14	14	CP6036	CP6036G	58.20 x 34.20 1478 x 869	58.50 x 34.50 1486 x 876	1	3-point	30.00 762	1.70 43
CSD603612LG	60.00 x 36.00 x 12.00 1524 x 914 x 305	RAL 7035 Lt. Gray	14	14	CP6036	CP6036G	58.20 x 34.20 1478 x 869	58.50 x 34.50 1486 x 876	1	3-point	30.00 762	1.70 43
CSD242016	24.00 x 20.00 x 16.00 610 x 508 x 406	ANSI 61 Gray	14	16	CP2420	CP2420G	22.20 x 18.20 564 x 462	22.50 x 18.50 572 x 470	1	Quarter-turn	12.00 305	1.45 37
CSD242016LG	24.00 x 20.00 x 16.00 610 x 508 x 406	RAL 7035 Lt. Gray	14	16	CP2420	CP2420G	22.20 x 18.20 564 x 462	22.50 x 18.50 572 x 470	1	Quarter-turn	12.00 305	1.45 37
CSD242416	24.00 x 24.00 x 16.00 610 x 610 x 406	ANSI 61 Gray	14	14	CP2424	CP2424G	22.20 x 22.20 564 x 564	22.50 x 22.50 572 x 572	2	Quarter-turn	5.00 127	1.45 37
CSD242416LG	24.00 x 24.00 x 16.00 610 x 610 x 406	RAL 7035 Lt. Gray	14	14	CP2424	CP2424G	22.20 x 22.20 564 x 564	22.50 x 22.50 572 x 572	2	Quarter-turn	5.00 127	1.45 37
CSD302416	30.00 x 24.00 x 16.00 762 x 610 x 406	ANSI 61 Gray	14	14	CP3024	CP3024G	28.20 x 22.20 716 x 564	28.50 x 22.50 724 x 572	2	Quarter-turn	5.00 127	1.45 37
CSD302416LG	30.00 x 24.00 x 16.00 762 x 610 x 406	RAL 7035 Lt. Gray	14	14	CP3024	CP3024G	28.20 x 22.20 716 x 564	28.50 x 22.50 724 x 572	2	Quarter-turn	5.00 127	1.45 37
CSD362416	36.00 x 24.00 x 16.00 914 x 610 x 406	ANSI 61 Gray	14	14	CP3624	CP3624G	34.20 x 22.20 869 x 564	34.50 x 22.50 876 x 572	2	Quarter-turn	5.00 127	1.45 37
CSD362416LG	36.00 x 24.00 x 16.00 914 x 610 x 406	RAL 7035 Lt. Gray	14	14	CP3624	CP3624G	34.20 x 22.20 869 x 564	34.50 x 22.50 876 x 572	2	Quarter-turn	5.00 127	1.45 37
CSD363016	36.00 x 30.00 x 16.00 914 x 762 x 406	ANSI 61 Gray	14	14	CP3630	CP3630G	34.20 x 28.20 869 x 716	34.50 x 28.50 876 x 724	2	Quarter-turn	5.00 127	1.45 37
CSD363016LG	36.00 x 30.00 x 16.00 914 x 762 x 406	RAL 7035 Lt. Gray	14	14	CP3630	CP3630G	34.20 x 28.20 869 x 716	34.50 x 28.50 876 x 724	2	Quarter-turn	5.00 127	1.45 37
CSD363616	36.00 x 36.00 x 16.00 914 x 914 x 406	ANSI 61 Gray	14	14	CP3636	CP3636G	34.20 x 34.20 869 x 869	34.50 x 34.50 876 x 876	2	Quarter-turn	5.00 127	1.45 37
CSD363616LG	36.00 x 36.00 x 16.00 914 x 914 x 406	RAL 7035 Lt. Gray	14	14	CP3636	CP3636G	34.20 x 34.20 869 x 869	34.50 x 34.50 876 x 876	2	Quarter-turn	5.00 127	1.45 37
CSD423016	42.00 x 30.00 x 16.00 1067 x 762 x 406	ANSI 61 Gray	14	14	CP4230	CP4230G	40.20 x 28.20 1021 x 716	40.50 x 28.50 1029 x 724	1	3-point	21.00 533	1.70 43
CSD423016LG	42.00 x 30.00 x 16.00 1067 x 762 x 406	RAL 7035 Lt. Gray	14	14	CP4230	CP4230G	40.20 x 28.20 1021 x 716	40.50 x 28.50 1029 x 724	1	3-point	21.00 533	1.70 43
CSD423616	42.00 x 36.00 x 16.00 1067 x 914 x 406	ANSI 61 Gray	14	14	CP4236	CP4236G	40.20 x 34.20 1021 x 869	40.50 x 34.50 1029 x 876	1	3-point	21.00 533	1.70 43
CSD423616LG	42.00 x 36.00 x 16.00 1067 x 914 x 406	RAL 7035 Lt. Gray	14	14	CP4236	CP4236G	40.20 x 34.20 1021 x 869	40.50 x 34.50 1029 x 876	1	3-point	21.00 533	1.70 43
CSD483016	48.00 x 30.00 x 16.00 1219 x 762 x 406	ANSI 61 Gray	14	14	CP3048	CP3048G	28.20 x 46.20 716 x 1174	46.50 x 28.50 1181 x 724	1	3-point	24.00 610	1.70 43
CSD483016LG	48.00 x 30.00 x 16.00 1219 x 762 x 406	RAL 7035 Lt. Gray	14	14	CP3048	CP3048G	28.20 x 46.20 716 x 1174	46.50 x 28.50 1181 x 724	1	3-point	24.00 610	1.70 43
CSD483616	48.00 x 36.00 x 16.00 1219 x 914 x 406	ANSI 61 Gray	14	14	CP4836	CP4836G	46.20 x 34.20 1173 x 869	46.50 x 34.50 1181 x 876	1	3-point	24.00 610	1.70 43
CSD483616LG	48.00 x 36.00 x 16.00 1219 x 914 x 406	RAL 7035 Lt. Gray	14	14	CP4836	CP4836G	46.20 x 34.20 1173 x 869	46.50 x 34.50 1181 x 876	1	3-point	24.00 610	1.70 43
CSD603616	60.00 x 36.00 x 16.00 1524 x 914 x 406	ANSI 61 Gray	14	14	CP6036	CP6036G	58.20 x 34.20 1478 x 869	58.50 x 34.50 1486 x 876	1	3-point	30.00 762	1.70 43
CSD603616LG	60.00 x 36.00 x 16.00 1524 x 914 x 406	RAL 7035 Lt. Gray	14	14	CP6036	CP6036G	58.20 x 34.20 1478 x 869	58.50 x 34.50 1486 x 876	1	3-point	30.00 762	1.70 43
CSD242420	24.00 x 24.00 x 20.00 610 x 610 x 508	ANSI 61 Gray	14	14	CP2424	CP2424G	22.20 x 22.20 564 x 564	22.50 x 22.50 572 x 572	2	Quarter-turn	5.00 127	1.45 37
CSD242420LG	24.00 x 24.00 x 20.00 610 x 610 x 508	RAL 7035 Lt. Gray	14	14	CP2424	CP2424G	22.20 x 22.20 564 x 564	22.50 x 22.50 572 x 572	2	Quarter-turn	5.00 127	1.45 37
CSD302420	30.00 x 24.00 x 20.00 762 x 610 x 508	ANSI 61 Gray	14	14	CP3024	CP3024G	28.20 x 22.20 716 x 564	28.50 x 22.50 724 x 572	2	Quarter-turn	5.00 127	1.45 37
CSD302420LG	30.00 x 24.00 x 20.00 762 x 610 x 508	RAL 7035 Lt. Gray	14	14	CP3024	CP3024G	28.20 x 22.20 716 x 564	28.50 x 22.50 724 x 572	2	Quarter-turn	5.00 127	1.45 37
CSD363020	36.00 x 30.00 x 20.00 914 x 762 x 508	ANSI 61 Gray	14	14	CP3630	CP3630G	34.20 x 28.20 869 x 716	34.50 x 28.50 876 x 724	2	Quarter-turn	5.00 127	1.45 37
CSD363020LG	36.00 x 30.00 x 20.00 914 x 762 x 508	RAL 7035 Lt. Gray	14	14	CP3630	CP3630G	34.20 x 28.20 869 x 716	34.50 x 28.50 876 x 724	2	Quarter-turn	5.00 127	1.45 37
CSD483620	48.00 x 36.00 x 20.00 1219 x 914 x 508	ANSI 61 Gray	14	14	CP4836	CP4836G	46.20 x 34.20 1174 x 869	46.50 x 34.50 1181 x 876	1	3-point	24.00 610	1.70 43
CSD483620LG	48.00 x 36.00 x 20.00 1219 x 914 x 508	RAL 7035 Lt. Gray	14	14	CP4836	CP4836G	46.20 x 34.20 1174 x 869	46.50 x 34.50 1181 x 876	1	3-point	24.00 610	1.70 43

Purchase panels separately.

Optional NEMA-size panels require conversion kit Catalog Number CCPM4.

RSPSupply - 1-888-532-2706 - https://www.RSPSupply.com
See the product details here

RSP Supply Inc. | https://www.rspsupply.com

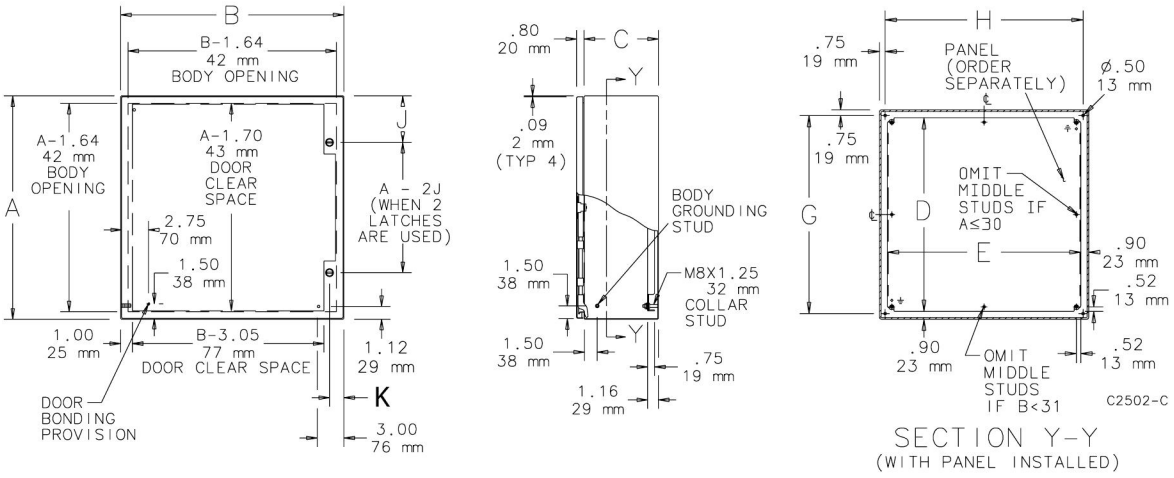

RSPSupply - 1-888-532-2706 - https://www.RSPSupply.com
See the product details here

RSP Supply Inc. | https://www.rspsupply.com

nVent | HOFFMAN

Standard Product **Single-Door Enclosures with Windows**

Catalog Number	AxBxC in./mm	Finish	Door Ga.	Body Ga.	CONCEPT Panel	CONCEPT Conductive Panel	Panel Size D x E in./mm	Mounting G x H in./mm	Window Size M x N in./mm	Latches qty.	Latches style	J in./mm
CSD12106W	12.00 x 10.00 x 6.00 305 x 254 x 152	ANSI 61 Gray	14	16	CP1210	CP1210G	10.20 x 8.20 259 x 208	10.50 x 8.50 267 x 216	8.49 x 5.17 216 x 131	1	Quarter-turn	6.00 152
CSD12106WLG	12.00 x 10.00 x 6.00 305 x 254 x 152	RAL 7035 Lt. Gray	14	16	CP1210	CP1210G	10.20 x 8.20 259 x 208	10.50 x 8.50 267 x 216	8.49 x 5.17 216 x 131	1	Quarter-turn	6.00 152
CSD12126W	12.00 x 12.00 x 6.00 305 x 305 x 152	ANSI 61 Gray	14	16	CP1212	CP1212G	10.20 x 10.20 259 x 259	10.50 x 10.50 267 x 267	8.49 x 7.30 216 x 185	1	Quarter-turn	6.00 152
CSD12126WLG	12.00 x 12.00 x 6.00 305 x 305 x 152	RAL 7035 Lt. Gray	14	16	CP1212	CP1212G	10.20 x 10.20 259 x 259	10.50 x 10.50 267 x 267	8.49 x 7.30 222 x 180	1	Quarter-turn	6.00 152
CSD16126W	16.00 x 12.00 x 6.00 406 x 305 x 152	ANSI 61 Gray	14	16	CP1612	CP1612G	14.20 x 10.20 361 x 259	14.50 x 10.50 368 x 267	12.49 x 7.30 317 x 185	1	Quarter-turn	8.00 203
CSD16126WLG	16.00 x 12.00 x 6.00 406 x 305 x 152	RAL 7035 Lt. Gray	14	16	CP1612	CP1612G	14.20 x 10.20 361 x 259	14.50 x 10.50 368 x 267	12.49 x 7.30 317 x 185	1	Quarter-turn	8.00 203
CSD20166W	20.00 x 16.00 x 6.00 508 x 406 x 152	ANSI 61 Gray	14	16	CP2016	CP2016G	18.20 x 14.20 462 x 361	18.50 x 14.50 470 x 368	16.49 x 11.30 419 x 287	1	Quarter-turn	10.00 254
CSD20166WLG	20.00 x 16.00 x 6.00 508 x 406 x 152	RAL 7035 Lt. Gray	14	16	CP2016	CP2016G	18.20 x 14.20 462 x 361	18.50 x 14.50 470 x 368	16.49 x 11.30 419 x 287	1	Quarter-turn	10.00 254
CSD20206W	20.00 x 20.00 x 6.00 508 x 508 x 152	ANSI 61 Gray	14	16	CP2020	CP2020G	18.20 x 18.20 462 x 462	18.50 x 18.50 470 x 470	16.49 x 15.30 419 x 389	1	Quarter-turn	10.00 254
CSD20206WLG	20.00 x 20.00 x 6.00 508 x 508 x 152	RAL 7035 Lt. Gray	14	16	CP2020	CP2020G	18.20 x 18.20 462 x 462	18.50 x 18.50 470 x 470	16.49 x 15.30 419 x 389	1	Quarter-turn	10.00 254
CSD24206W	24.00 x 20.00 x 6.00 610 x 508 x 152	ANSI 61 Gray	14	16	CP2420	CP2420G	22.20 x 18.20 564 x 462	22.50 x 18.50 572 x 470	20.49 x 15.30 520 x 389	1	Quarter-turn	12.00 305
CSD24206WLG	24.00 x 20.00 x 6.00 610 x 508 x 152	RAL 7035 Lt. Gray	14	16	CP2420	CP2420G	22.20 x 18.20 564 x 462	22.50 x 18.50 572 x 470	20.49 x 15.30 520 x 389	1	Quarter-turn	12.00 305
CSD24246W	24.00 x 24.00 x 6.00 610 x 610 x 152	ANSI 61 Gray	14	16	CP2424	CP2424G	22.20 x 22.20 564 x 564	22.50 x 22.50 572 x 572	20.49 x 18.07 520 x 459	2	Quarter-turn	5.00 127
CSD24246WLG	24.00 x 24.00 x 6.00 610 x 610 x 152	RAL 7035 Lt. Gray	14	16	CP2424	CP2424G	22.20 x 22.20 564 x 564	22.50 x 22.50 572 x 572	20.49 x 18.07 520 x 459	2	Quarter-turn	5.00 127
CSD30246W	30.00 x 24.00 x 6.00 762 x 610 x 152	ANSI 61 Gray	14	16	CP3024	CP3024G	28.20 X 22.20 716 x 564	28.50 x 22.50 267 x 216	26.49 x 18.07 673 x 459	1	Quarter-turn	5.00 127
CSD30246WLG	30.00 x 24.00 x 6.00 762 x 610 x 152	RAL 7035 Lt. Gray	14	16	CP3024	CP3024G	28.20 X 22.20 716 x 564	28.50 x 22.50 267 x 216	26.49 x 18.07 673 x 459	1	Quarter-turn	5.00 127
CSD12108W	12.00 x 10.00 x 8.00 305 x 254 x 203	ANSI 61 Gray	14	16	CP1210	CP1210G	10.20 x 8.20 259 x 208	10.50 x 8.50 267 x 216	8.49 x 5.17 216 x 131	1	Quarter-turn	6.00 152
CSD12108WLG	12.00 x 10.00 x 8.00 305 x 254 x 203	RAL 7035 Lt. Gray	14	16	CP1210	CP1210G	10.20 x 8.20 259 x 208	10.50 x 8.50 267 x 216	8.49 x 5.17 216 x 131	1	Quarter-turn	6.00 152
CSD12128W	12.00 x 12.00 x 8.00 305 x 305 x 203	ANSI 61 Gray	14	16	CP1212	CP1212G	10.20 X 10.20 259 x 259	10.50 x 10.50 267 x 267	8.49 x 7.30 216 x 185	1	Quarter-turn	6.00 152
CSD12128WLG	12.00 x 12.00 x 8.00 305 x 305 x 203	RAL 7035 Lt. Gray	14	16	CP1212	CP1212G	10.20 X 10.20 259 x 259	10.50 x 10.50 267 x 267	8.49 x 7.30 216 x 185	1	Quarter-turn	6.00 152
CSD16128W	16.00 x 12.00 x 8.00 406 x 305 x 203	ANSI 61 Gray	14	16	CP1612	CP1612G	14.20 x 10.20 361 x 259	14.50 x 10.50 368 x 267	12.49 x 7.30 317 x 185	1	Quarter-turn	8.00 203
CSD16128WLG	16.00 x 12.00 x 8.00 406 x 305 x 203	RAL 7035 Lt. Gray	14	16	CP1612	CP1612G	14.20 x 10.20 361 x 259	14.50 x 10.50 368 x 267	12.49 x 7.30 317 x 185	1	Quarter-turn	8.00 203
CSD20168W	20.00 x 16.00 x 8.00 508 x 406 x 203	ANSI 61 Gray	14	16	CP2016	CP2016	18.20 x 14.20 462 x 361	18.50 x 14.50 470 x 368	16.49 x 11.30 419 x 287	1	Quarter-turn	10.00 254
CSD20168WLG	20.00 x 16.00 x 8.00 508 x 406 x 203	RAL 7035 Lt. Gray	14	16	CP2016	CP2016G	18.20 x 14.20 462 x 361	18.50 x 14.50 470 x 368	16.49 x 11.30 419 x 287	1	Quarter-turn	10.00 254
CSD20208W	20.00 x 20.00 x 8.00 508 x 508 x 203	ANSI 61 Gray	14	16	CP2020	CP2020G	18.20 x 18.20 462 x 462	18.50 x 18.50 470 x 470	16.49 x 15.30 419 x 389	1	Quarter-turn	10.00 254
CSD20208WLG	20.00 x 20.00 x 8.00 508 x 508 x 203	RAL 7035 Lt. Gray	14	16	CP2020	CP2020G	18.20 x 18.20 462 x 462	18.50 x 18.50 470 x 470	16.49 x 15.30 419 x 389	1	Quarter-turn	10.00 254
CSD24208W	24.00 x 20.00 x 8.00 610 x 508 x 203	ANSI 61 Gray	14	16	CP2420	CP2420G	22.20 x 18.20 564 x 462	22.50 x 18.50 572 x 470	20.49 x 15.30 520 x 389	1	Quarter-turn	12.00 305
CSD24208WLG	24.00 x 20.00 x 8.00 610 x 508 x 203	RAL 7035 Lt. Gray	14	16	CP2420	CP2420G	22.20 x 18.20 564 x 462	22.50 x 18.50 572 x 470	20.49 x 15.30 520 x 389	1	Quarter-turn	12.00 305
CSD24248W	24.00 x 24.00 x 8.00 610 x 610 x 203	ANSI 61 Gray	14	16	CP2424	CP2424G	22.20 x 22.20 564 x 564	22.50 x 22.50 572 x 572	20.49 x 18.07 520 x 459	2	Quarter-turn	5.00 127
CSD24248WLG	24.00 x 24.00 x 8.00 610 x 610 x 203	RAL 7035 Lt. Gray	14	16	CP2424	CP2424G	22.20 x 22.20 564 x 564	22.50 x 22.50 572 x 572	20.49 x 18.07 250 x 459	2	Quarter-turn	5.00 127
CSD30248W	30.00 x 24.00 x 8.00 762 x 610 x 203	ANSI 61 Gray	14	16	CP3024	CP3024G	28.20 x 22.20 716 x 564	28.50 x 22.50 724 x 572	26.49 x 18.07 673 x 459	2	Quarter-turn	5.00 127
CSD30248WLG	30.00 x 24.00 x 8.00 762 x 610 x 203	RAL 7035 Lt. Gray	14	16	CP3024	CP3024G	28.20 x 22.20 716 x 564	28.50 x 22.50 724 x 572	26.49 x 18.07 673 x 459	2	Quarter-turn	5.00 127
CSD161210W	16.00 x 12.00 x 10.00 406 x 305 x 254	ANSI 61 Gray	14	16	CP1612	CP1612G	14.20 x 10.20 361 x 259	14.50 x 10.50 368 x 267	12.49 x 7.30 317 x 185	1	Quarter-turn	8.00 203
CSD161210WLG	16.00 x 12.00 x 10.00 406 x 305 x 254	RAL 7035 Lt. Gray	14	16	CP1612	CP1612G	14.20 x 10.20 361 x 259	14.50 x 10.50 368 x 267	12.49 x 7.30 317 x 185	1	Quarter-turn	8.00 203
CSD201610W	20.00 x 16.00 x 10.00 508 x 406 x 254	ANSI 61 Gray	14	16	CP2016	CP2016G	18.20 x 14.20 462 x 361	18.50 x 14.50 470 x 368	16.49 x 11.30 419 x 287	1	Quarter-turn	10.00 254
CSD201610WLG	20.00 x 16.00 x 10.00 508 x 406 x 254	RAL 7035 Lt. Gray	14	16	CP2016	CP2016G	18.20 x 14.20 462 x 361	18.50 x 14.50 470 x 368	16.49 x 11.30 419 x 287	1	Quarter-turn	10.00 254
CSD202010W	20.00 x 20.00 x 10.00 508 x 508 x 254	ANSI 61 Gray	14	16	CP2020	CP2020G	18.20 x 18.20 462 x 462	18.50 x 18.50 470 x 470	16.49 x 15.30 419 x 389	1	Quarter-turn	10.00 254
CSD202010WLG	20.00 x 20.00 x 10.00 508 x 508 x 254	RAL 7035 Lt. Gray	14	16	CP2020	CP2020G	18.20 x 18.20 462 x 462	18.50 x 18.50 470 x 470	16.49 x 15.30 419 x 389	1	Quarter-turn	10.00 254
CSD242010W	24.00 x 20.00 x 10.00 610 x 508 x 254	ANSI 61 Gray	14	16	CP2420	CP2420G	22.20 x 18.20 564 x 462	22.50 x 18.50 572 x 470	20.49 x 15.30 527 x 384	1	Quarter-turn	12.00 305
CSD242010WLG	24.00 x 20.00 x 10.00 610 x 508 x 254	RAL 7035 Lt. Gray	14	16	CP2420	CP2420G	22.20 x 18.20 564 x 462	22.50 x 18.50 572 x 470	20.49 x 15.30 527 x 384	1	Quarter-turn	12.00 305
CSD242410W	24.00 x 24.00 x 10.00 610 x 610 x 254	ANSI 61 Gray	14	16	CP2424	CP2424G	22.20 x 22.20 564 x 564	22.50 x 22.50 572 x 572	20.49 x 18.07 520 x 459	2	Quarter-turn	5.00 127

RSPSupply - 1-888-532-2706 - https://www.RSPSupply.com
See the product details here

RSP Supply Inc. | https://www.rspsupply.com

Catalog Number	AxBxC in./mm	Finish	Door Ga.	Body Ga.	CONCEPT Panel	CONCEPT Conductive Panel	Panel Size D x E in./mm	Mounting G x H in./mm	Window Size M x N in./mm	Latches qty.	Latches style	J in./mm
CSD242410WLG	24.00 x 24.00 x 10.00 610 x 610 x 254	RAL 7035 Lt. Gray	14	16	CP2424	CP2424G	22.20 x 22.20 564 x 564	22.50 x 22.50 572 x 572	20.49 x 18.07 520 x 459	2	Quarter-turn	5.00 127
CSD302410W	30.00 x 24.00 x 10.00 762 x 610 x 254	ANSI 61 Gray	14	16	CP3024	CP3024G	28.20 x 22.20 716 x 564	28.50 x 22.50 724 x 572	26.49 x 18.07 673 x 459	2	Quarter-turn	5.00 127
CSD302410WLG	30.00 x 24.00 x 10.00 762 x 610 x 254	RAL 7035 Lt. Gray	14	16	CP3024	CP3024G	28.20 x 22.20 716 x 564	28.50 x 22.50 724 x 572	26.49 x 18.07 673 x 459	2	Quarter-turn	5.00 127
CSD202012W	20.00 x 20.00 x 12.00 508 x 508 x 305	ANSI 61 Gray	14	16	CP2020	CP2020G	18.20 x 18.20 462 x 462	18.50 x 18.50 470 x 470	16.49 x 15.30 419 x 389	1	Quarter-turn	10.00 254
CSD202012WLG	20.00 x 20.00 x 12.00 508 x 508 x 305	RAL 7035 Lt. Gray	14	16	CP2020	CP2020G	18.20 x 18.20 462 x 462	18.50 x 18.50 470 x 470	16.49 x 15.30 419 x 389	1	Quarter-turn	10.00 254
CSD242012W	24.00 x 20.00 x 12.00 610 x 508 x 305	ANSI 61 Gray	14	16	CP2420	CP2420G	22.20 x 18.20 564 x 462	22.50 x 18.50 572 x 470	20.49 x 15.30 520 x 389	1	Quarter-turn	12.00 305
CSD242012WLG	24.00 x 20.00 x 12.00 610 x 508 x 305	RAL 7035 Lt. Gray	14	16	CP2420	CP2420G	22.20 x 18.20 564 x 462	22.50 x 18.50 572 x 470	20.49 x 15.30 520 x 389	1	Quarter-turn	12.00 305
CSD242412W	24.00 x 24.00 x 12.00 610 x 610 x 305	ANSI 61 Gray	14	16	CP2424	CP2424G	22.20 x 22.20 564 x 564	22.50 x 22.50 572 x 572	20.49 x 18.07 520 x 459	2	Quarter-turn	5.00 127
CSD242412WLG	24.00 x 24.00 x 12.00 610 x 610 x 305	RAL 7035 Lt. Gray	14	16	CP2424	CP2424G	22.20 x 22.20 564 x 564	22.50 x 22.50 572 x 572	20.49 x 18.07 527 x 449	2	Quarter-turn	5.00 127
CSD302412W	30.00 x 24.00 x 12.00 762 x 610 x 305	ANSI 61 Gray	14	16	CP3024	CP3024G	28.20 x 22.20 716 x 564	28.50 x 22.50 724 x 572	26.49 x 18.07 673 x 459	2	Quarter-turn	5.00 127
CSD302412WLG	30.00 x 24.00 x 12.00 762 x 610 x 305	RAL 7035 Lt. Gray	14	16	CP3024	CP3024G	28.20 x 22.20 716 x 564	28.50 x 22.50 724 x 572	26.49 x 18.07 679 x 449	2	Quarter-turn	5.00 127
CSD242416W	24.00 x 24.00 x 16.00 610 x 610 x 406	ANSI 61 Gray	14	14	CP2424	CP2424G	22.20 x 22.20 564 x 564	22.50 x 22.50 572 x 572	20.49 x 18.07 520 x 459	2	Quarter-turn	5.00 127
CSD242416WLG	24.00 x 24.00 x 16.00 610 x 610 x 406	RAL 7035 Lt. Gray	14	14	CP2424	CP2424G	22.20 x 22.20 564 x 564	22.50 x 22.50 572 x 572	20.49 x 18.07 520 x 459	2	Quarter-turn	5.00 127
CSD242420W	24.00 x 24.00 x 20.00 610 x 610 x 508	ANSI 61 Gray	14	14	CP2424	CP2424G	22.20 x 22.20 564 x 564	22.50 x 22.50 572 x 572	20.49 x 18.07 520 x 459	2	Quarter-turn	5.00 127
CSD242420WLG	24.00 x 24.00 x 20.00 610 x 610 x 508	RAL 7035 Lt. Gray	14	14	CP2424	CP2424G	22.20 x 22.20 564 x 564	22.50 x 22.50 572 x 572	20.49 x 18.07 520 x 459	2	Quarter-turn	5.00 127
CSD302420W	30.00 x 24.00 x 20.00 762 x 610 x 508	ANSI 61 Gray	14	14	CP3024	CP3024G	28.20 x 22.20 716 x 564	28.50 x 22.50 724 x 572	26.49 x 18.07 673 x 459	2	Quarter-turn	5.00 127
CSD302420WLG	30.00 x 24.00 x 20.00 762 x 610 x 508	RAL 7035 Lt. Gray	14	14	CP3024	CP3024G	28.20 x 22.20 716 x 564	28.50 x 22.50 724 x 572	26.49 x 18.07 673 x 459	2	Quarter-turn	5.00 127

Purchase panels separately.

Optional NEMA-size panels require conversion kit Catalog Number CCPM4.

CONCEPT Single-Door Wall-Mounted Enclosures with Windows

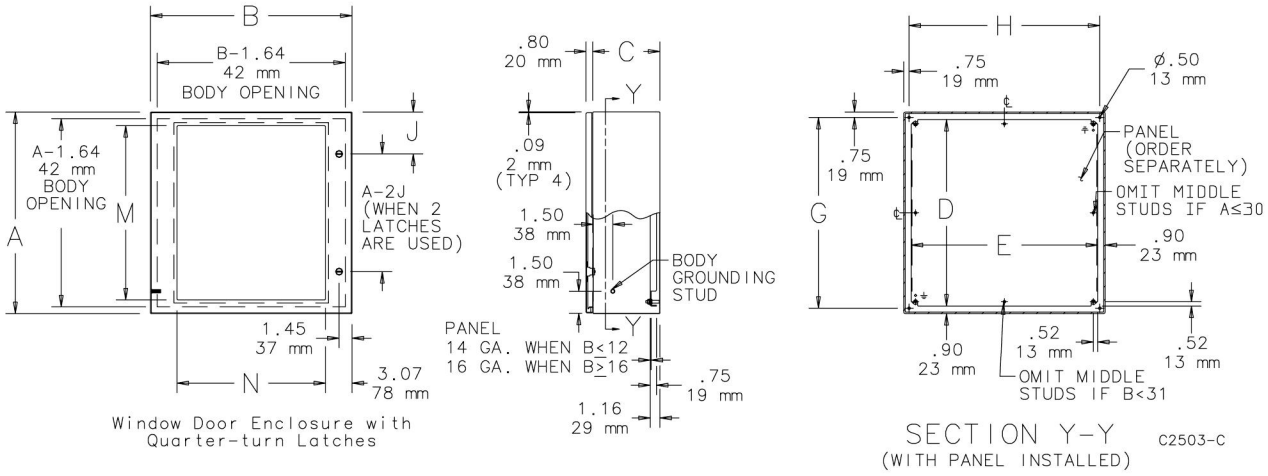

RSPSupply - 1-888-532-2706 - https://www.RSPSupply.com
See the product details here

RSP Supply Inc. | https://www.rspsupply.com

nVent | HOFFMAN

Standard Product **Flush-Mounted Enclosures**

Catalog Number	AxBxC in./mm	Finish	Door Ga.	Body Ga.	CONCEPT Panel	Conductive CONCEPT Panel	Panel Size D x E in./mm	Mounting G x H in./mm	Latches qty.	Latches style	J in./mm
CFM12126	12.00 x 12.00 x 6.00 305 x 305 x 152	ANSI 61 Gray	16	16	CP1212	CP1212G	10.20 x 10.20 259 x 259	12.75 x 14.25 324 x 362	1	Quarter-turn	6.00 152
CFM12126LG	12.00 x 12.00 x 6.00 305 x 305 x 152	RAL 7035 Lt. Gray	16	16	CP1212	CP1212G	10.20 x 10.20 259 x 259	12.75 x 14.25 324 x 362	1	Quarter-turn	6.00 152
CFM16126	16.00 x 12.00 x 6.00 406 x 305 x 152	ANSI 61 Gray	16	16	CP1612	CP1612G	14.20 x 10.20 361 x 259	16.75 x 14.25 425 x 362	1	Quarter-turn	8.00 203
CFM16126LG	16.00 x 12.00 x 6.00 406 x 305 x 152	RAL 7035 Lt. Gray	16	16	CP1612	CP1612G	14.20 x 10.20 361 x 259	16.75 x 14.25 425 x 362	1	Quarter-turn	8.00 203
CFM20166	20.00 x 16.00 x 6.00 508 x 406 x 152	ANSI 61 Gray	16	16	CP2016	CP2016G	18.20 x 14.20 462 x 361	20.75 x 18.25 527 x 463	1	Quarter-turn	10.00 254
CFM20166LG	20.00 x 16.00 x 6.00 508 x 406 x 152	RAL 7035 Lt. Gray	16	16	CP2016	CP2016G	18.20 x 14.20 462 x 361	20.75 x 18.25 527 x 463	1	Quarter-turn	10.00 254
CFM20206	20.00 x 20.00 x 6.00 508 x 508 x 152	ANSI 61 Gray	16	16	CP2020	CP2020G	18.20 x 18.20 462 x 462	20.75 x 22.25 527 x 565	1	Quarter-turn	10.00 254
CFM20206LG	20.00 x 20.00 x 6.00 508 x 508 x 152	RAL 7035 Lt. Gray	16	16	CP2020	CP2020G	18.20 x 18.20 462 x 462	20.75 x 22.25 527 x 565	1	Quarter-turn	10.00 254
CFM24208	24.00 x 20.00 x 8.00 610 x 508 x 203	ANSI 61 Gray	16	16	CP2420	CP2420G	22.20 x 18.20 564 x 462	24.75 x 22.25 629 x 565	1	Quarter-turn	12.00 305
CFM24208LG	24.00 x 20.00 x 8.00 610 x 508 x 203	RAL 7035 Lt. Gray	16	16	CP2420	CP2420G	22.20 x 18.20 564 x 462	24.75 x 22.25 629 x 565	1	Quarter-turn	12.00 305
CFM24248	24.00 x 24.00 x 8.00 610 x 610 x 203	ANSI 61 Gray	14	16	CP2424	CP2424G	22.20 x 22.20 564 x 564	24.75 x 26.25 629 x 667	2	Quarter-turn	5.00 127
CFM24248LG	24.00 x 24.00 x 8.00 610 x 610 x 203	RAL 7035 Lt. Gray	14	16	CP2424	CP2424G	22.20 x 22.20 564 x 564	24.75 x 26.25 629 x 667	2	Quarter-turn	5.00 127
CFM30248	30.00 x 24.00 x 8.00 762 x 610 x 203	ANSI 61 Gray	14	16	CP3024	CP3024G	28.20 x 22.20 716 x 564	30.75 x 26.25 781 x 667	2	Quarter-turn	5.00 127
CFM30248LG	30.00 x 24.00 x 8.00 762 x 610 x 203	RAL 7035 Lt. Gray	14	16	CP3024	CP3024G	28.20 x 22.20 716 x 564	30.75 x 26.25 781 x 667	2	Quarter-turn	5.00 127

Purchase panels separately.

Optional NEMA-size panels require conversion kit Catalog Number CCPM4.

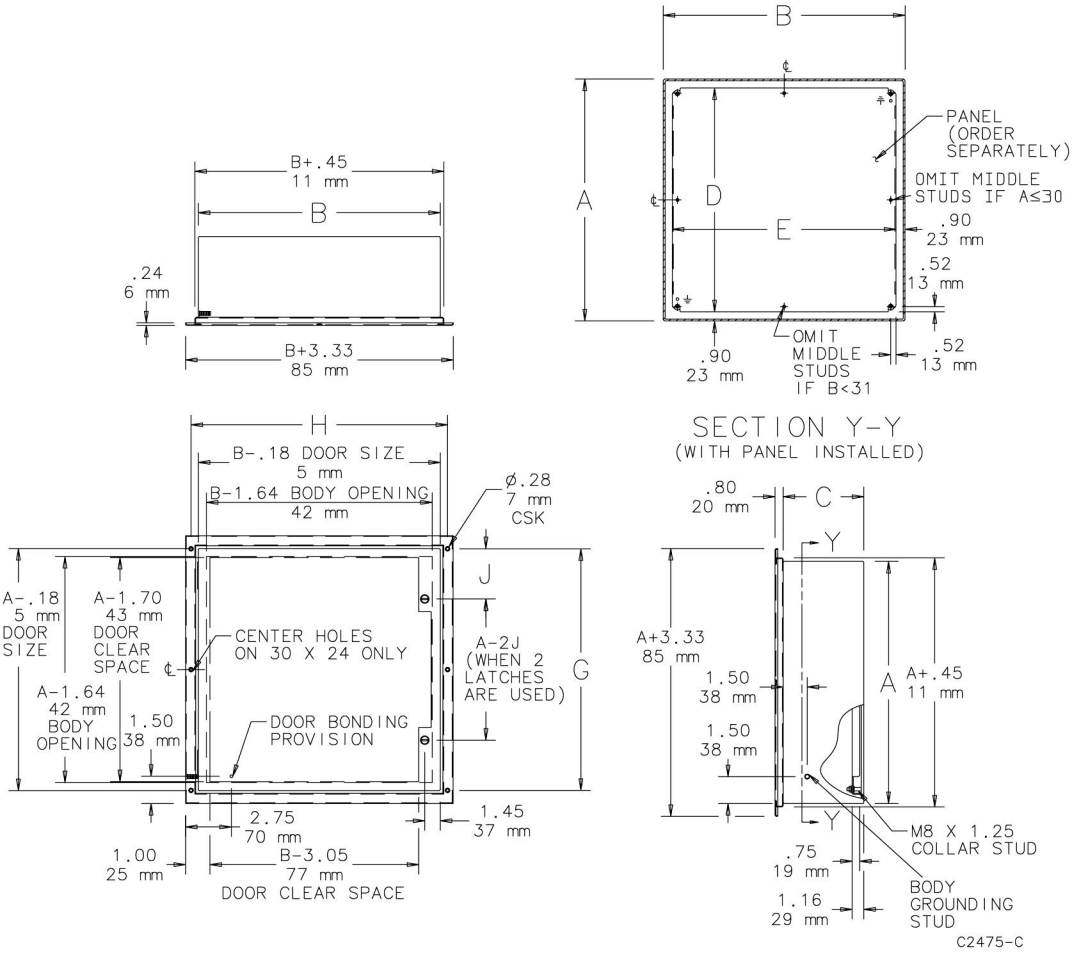

RSPSupply - 1-888-532-2706 - https://www.RSPSupply.com
See the product details here

RSP Supply Inc. | https://www.rspsupply.com

nVent | HOFFMAN

Standard Product **Two-Door Enclosures**

Catalog Number	AxBxC in./mm	Finish	Door Ga.	Body Ga.	CONCEPT Panel	Conductive CONCEPT Panel	Panel Size D x E in./mm	Mounting G x H in./mm	Latches qty.	Latches style	J in./mm
CTD24428	24.00 x 42.00 x 8.00 610 x 1067 x 203	ANSI 61 Gray	14	14	CP2442	CP2442G	22.20 x 40.20 259 x 564	22.50 x 40.50 572 x 1029	1	3-point	12.00 305
CTD24428LG	24.00 x 42.00 x 8.00 610 x 1067 x 203	RAL 7035 Lt. Gray	14	14	CP2442	CP2442G	22.20 x 40.20 259 x 564	22.50 x 40.50 572 x 1029	1	3-point	12.00 305
CTD24488	24.00 x 48.00 x 8.00 610 x 1219 x 203	ANSI 61 Gray	14	14	CP4824	CP4824G	46.20 x 22.20 1174 x 564	22.50 x 46.50 572 x 1181	1	3-point	12.00 305
CTD24488LG	24.00 x 48.00 x 8.00 610 x 1219 x 203	RAL 7035 Lt. Gray	14	14	CP4824	CP4824G	46.20 x 22.20 1174 x 564	22.50 x 46.50 572 x 1181	1	3-point	12.00 305
CTD30488	30.00 x 48.00 x 8.00 762 x 1219 x 203	ANSI 61 Gray	14	14	CP3048	CP3048G	28.20 x 46.20 259 x 716	28.50 x 46.50 724 x 1181	1	3-point	15.00 381
CTD30488LG	30.00 x 48.00 x 8.00 762 x 1219 x 203	RAL 7035 Lt. Gray	14	14	CP3048	CP3048G	28.20 x 46.20 259 x 716	28.50 x 46.50 724 x 1181	1	3-point	15.00 381
CTD244210	24.00 x 42.00 x 10.00 610 x 1067 x 254	ANSI 61 Gray	14	14	CP2442	CP2442G	22.20 x 40.20 564 x 1021	22.50 x 40.50 572 x 1029	1	3-point	12.00 305
CTD244210LG	24.00 x 42.00 x 10.00 610 x 1067 x 254	RAL 7035 Lt. Gray	14	14	CP2442	CP2442G	22.20 x 40.20 564 x 1021	22.50 x 40.50 572 x 1029	1	3-point	12.00 305
CTD304210	30.00 x 42.00 x 10.00 762 x 1067 x 254	ANSI 61 Gray	14	14	CP4230	CP4230G	40.20 x 28.20 1021 x 716	28.50 x 40.50 724 x 1029	1	3-point	15.00 381
CTD304210LG	30.00 x 42.00 x 10.00 762 x 1067 x 254	RAL 7035 Lt. Gray	14	14	CP4230	CP4230G	40.20 x 28.20 1021 x 716	28.50 x 40.50 724 x 1029	1	3-point	15.00 381
CTD304810	30.00 x 48.00 x 10.00 762 x 1219 x 254	ANSI 61 Gray	14	14	CP3048	CP3048G	28.20 x 46.20 716 x 1174	28.50 x 46.50 724 x 1181	1	3-point	15.00 381
CTD304810LG	30.00 x 48.00 x 10.00 762 x 1219 x 254	RAL 7035 Lt. Gray	14	14	CP3048	CP3048G	28.20 x 46.20 716 x 1174	28.50 x 46.50 724 x 1181	1	3-point	15.00 381
CTD306012	30.00 x 60.00 x 12.00 762 x 1524 x 305	ANSI 61 Gray	14	14	CP3060	CP3060G	28.20 x 58.20 361 x 716	28.50 x 58.50 724 x 1486	1	3-point	15.00 381
CTD306012LG	30.00 x 60.00 x 12.00 762 x 1524 x 305	RAL 7035 Lt. Gray	14	14	CP3060	CP3060G	28.20 x 58.20 361 x 716	28.50 x 58.50 724 x 1486	1	3-point	15.00 381
CTD364212	36.00 x 42.00 x 12.00 914 x 1067 x 305	ANSI 61 Gray	14	14	CP4236	CP4236G	40.20 x 34.20 1021 x 869	34.50 x 40.50 876 x 1029	1	3-point	18.00 457
CTD364212LG	36.00 x 42.00 x 12.00 914 x 1067 x 305	RAL 7035 Lt. Gray	14	14	CP4236	CP4236G	40.20 x 34.20 1021 x 869	34.50 x 40.50 876 x 1029	1	3-point	18.00 457
CTD364812	36.00 x 48.00 x 12.00 914 x 1219 x 305	ANSI 61 Gray	14	14	CP4836	CP4836G	34.20 x 46.20 462 x 869	34.50 x 46.50 876 x 1181	1	3-point	18.00 457
CTD364812LG	36.00 x 48.00 x 12.00 914 x 1219 x 305	RAL 7035 Lt. Gray	14	14	CP4836	CP4836G	34.20 x 46.20 462 x 869	34.50 x 46.50 876 x 1181	1	3-point	18.00 457
CTD366012	36.00 x 60.00 x 12.00 914 x 1524 x 305	ANSI 61 Gray	14	14	CP6036	CP6036G	34.20 x 58.20 462 x 869	34.50 x 58.50 876 x 1486	1	3-point	18.00 457
CTD366012LG	36.00 x 60.00 x 12.00 914 x 1524 x 305	RAL 7035 Lt. Gray	14	14	CP6036	CP6036G	34.20 x 58.20 462 x 869	34.50 x 58.50 876 x 1486	1	3-point	18.00 457
CTD424212	42.00 x 42.00 x 12.00 1067 x 1067 x 305	ANSI 61 Gray	14	14	CP4242	CP4242G	40.20 x 40.20 1021 x 1021	40.50 x 40.50 1029 x 1029	1	3-point	21.00 533
CTD424212LG	42.00 x 42.00 x 12.00 1067 x 1067 x 305	RAL 7035 Lt. Gray	14	14	CP4242	CP4242G	40.20 x 40.20 1021 x 1021	40.50 x 40.50 1029 x 1029	1	3-point	21.00 533
CTD426012	42.00 x 60.00 x 12.00 1067 x 1524 x 305	ANSI 61 Gray	14	14	CP4260	CP4260G	40.20 x 58.20 101 x 1478	40.50 x 58.50 1029 x 1478	1	3-point	21.00 533
CTD426012LG	42.00 x 60.00 x 12.00 1067 x 1524 x 305	RAL 7035 Lt. Gray	14	14	CP4260	CP4260G	40.20 x 58.20 101 x 1478	40.50 x 58.50 1029 x 1478	1	3-point	21.00 533
CTD484812	48.00 x 48.00 x 12.00 1219 x 1219 x 305	ANSI 61 Gray	14	14	CP4848	CP4848G	46.20 x 46.20 1174 x 1174	46.50 x 46.50 1181 x 1181	1	3-point	24.00 610
CTD484812LG	48.00 x 48.00 x 12.00 1219 x 1219 x 305	RAL 7035 Lt. Gray	14	14	CP4848	CP4848G	46.20 x 46.20 1174 x 1174	46.50 x 46.50 1181 x 1181	1	3-point	24.00 610
CTD364216	36.00 x 42.00 x 16.00 914 x 1067 x 406	ANSI 61 Gray	14	14	CP4236	CP4236G	40.20 x 34.20 1021 x 869	34.50 x 40.50 876 x 1029	1	3-point	18.00 457
CTD364216LG	36.00 x 42.00 x 16.00 914 x 1067 x 406	RAL 7035 Lt. Gray	14	14	CP4236	CP4236G	40.20 x 34.20 1021 x 869	34.50 x 40.50 876 x 1029	1	3-point	18.00 457

Purchase panels separately.

Optional NEMA-size panels require conversion kit Catalog Number CCPM4.

RSPSupply - 1-888-532-2706 - https://www.RSPSupply.com
See the product details here

RSP Supply Inc. | https://www.rspsupply.com

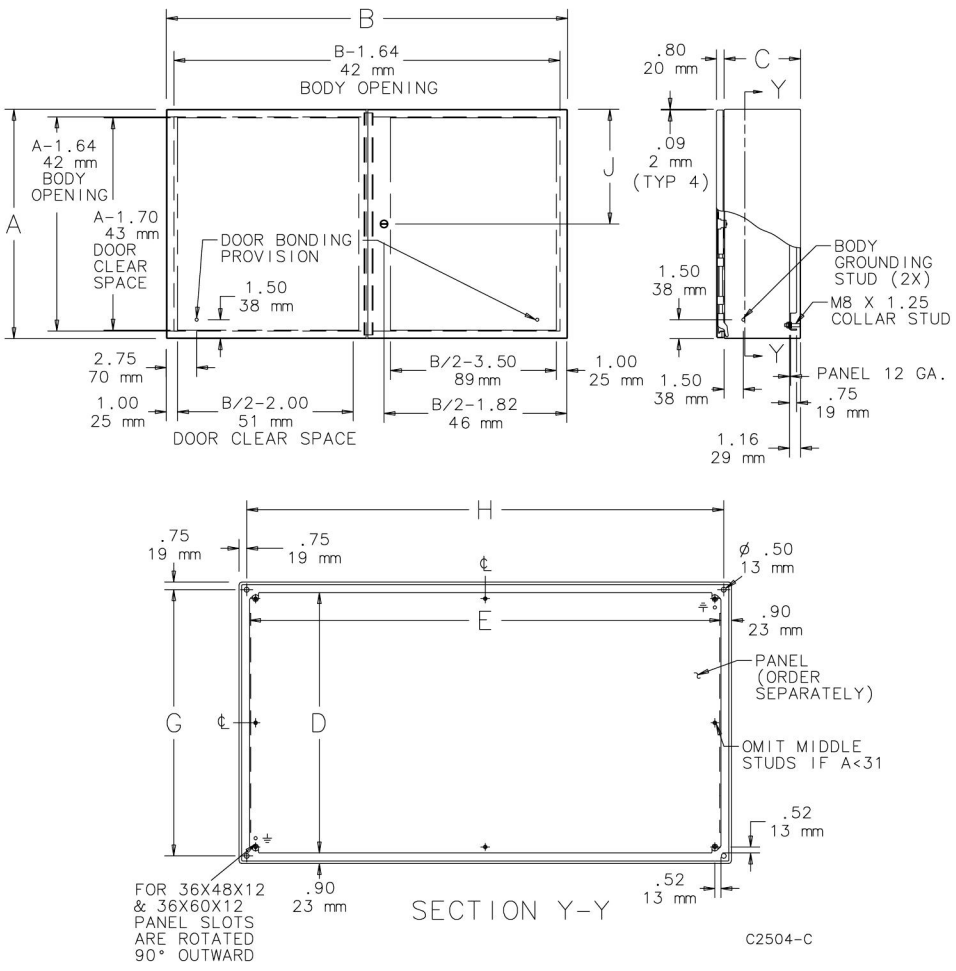

RSPSupply - 1-888-532-2706 - https://www.RSPSupply.com
See the product details here