Access Control Integration Host User's Manual

V1.1.6

Table of Contents

1 Overview **4**
2 Device Structure and Installation **5**
3 Structure **8**
3.1 System Structure 8
3.2 3.2 Wiring 8
4 4 Function Setting **12**
4.1 Login 12
4.2 User Management 12
4.2.2 Add User 13
4.2.3 Delete User 14
4.3 Unlock Mode 15
4.4 Period Setup 15
4.4.1 Card Swiping Period 16
4.4.2 Holiday period 16
4.4.3 Mode Period 17
4.5 System Settings 17
4.5.1 IP Setup 17
4.5.2 Date Setup 17
4.5.3 Unlock Time 18
4.5.4 Alarm Setup 18
4.5.5 Password Change 19
4.5.6 Main Card Management 19
4.5.7 Default 20
4.6 Reboot System 20
4.7 Local Info 20

Important Safeguards and Warnings

Note:

- Please change user default password after being armed.
- Do not install the device at position exposed to sunlight or in high temperature. Temperature rise in device may cause fire.
- Do not expose the device to lampblack, steam or dust. Otherwise it may cause fire or electric shock.
- The device must be installed on solid and flat surface in order to guarantee safety under load and earthquake. Otherwise, it may cause device to fall off or turnover.
- Do not drop or splash liquids onto the device, and do not place container with full liquid on the device to prevent liquid spilling from entering the device.
- Do not block air vent of the device or ventilation around the device. Otherwise, temperature in device will rise and may cause fire.
- Use the device only within rated input and output range.
- Do not disassemble the device without professional instruction.
- Please transport, use and store the product under appropriate temperature and humidity.

Warning

- Please use battery properly to avoid fire, explosion and other dangers.
- Please replace used battery with battery of the same type.
- Do not use power line other than the one specified. Please use it properly within rated range. Otherwise, it may cause fire or electric shock.
- Please use power supply matching SELV requirements, and IEC60950-1 Limited Power Source. Power supply shall follow requirements on device label.
- For I-type structure product, connect it to power supply plug with GND protection.
- If you use power plug or appliance coupler as disconnecting device, please maintain the disconnecting device available to be operated all the time.

Privacy Protection Notice

As the device user or data controller, you might collect personal data of others' such as face, fingerprints, car plate number, Email address, phone number, GPS and so on. You need to be in compliance with the local privacy protection laws and regulations to protect the legitimate rights and interests of other people by implementing measures include but not limited to: providing clear and visible identification to inform data subject the existence of surveillance area and providing related contact.

About the Manual

- The Manual is for reference only. If there is inconsistency between the Manual and the actual product, the actual product shall prevail.
- We are not liable for any loss caused by the operations that do not comply with the Manual.
- The Manual would be updated according to the latest laws and regulations of related regions. For detailed information, see the paper User's Manual, CD-ROM, QR code or our official website. If there is inconsistency between paper User's Manual and the electronic version, the electronic version shall prevail.
- All the designs and software are subject to change without prior written notice. The product updates might cause some differences between the actual product and the Manual. Please contact the customer service for the latest program and supplementary documentation.
- There still might be deviation in technical data, functions and operations description, or errors in print. If there is any doubt or dispute, please refer to our final explanation.
- Upgrade the reader software or try other mainstream reader software if the Guide (in PDF format) cannot be opened.
- All trademarks, registered trademarks and the company names in the Manual are the properties of their respective owners.
- Please visit our website, contact the supplier or customer service if there is any problem occurred when using the device.
- If there is any uncertainty or controversy, please refer to our final explanation.

1 Overview

The Access Control Integration Host integrates card reading, config and execution functions. Its has a neat appearance for medium to high-end clients such as commercial building, corporation and intelligent community.

It has:

- Touch keyboard + LCD display, TCP/IP protocol, support 30,000 valid cards and 150,000 records.
- Support unlock via card, password, card+password, card or password and by period.
- Door time out alarm, intrusion alarm, forced alarm, and vandal-proof alarm.
- Add guest card, forced card, blocklist/allowlist and patrol card, while support period of validity or times.
- Support 128 groups of schedule, 128 groups of period and 128 groups of holiday period.

2 Device Structure and Installation

Device appearance, dimension and installation are shown below. Unit is mm.

Figure 2-1

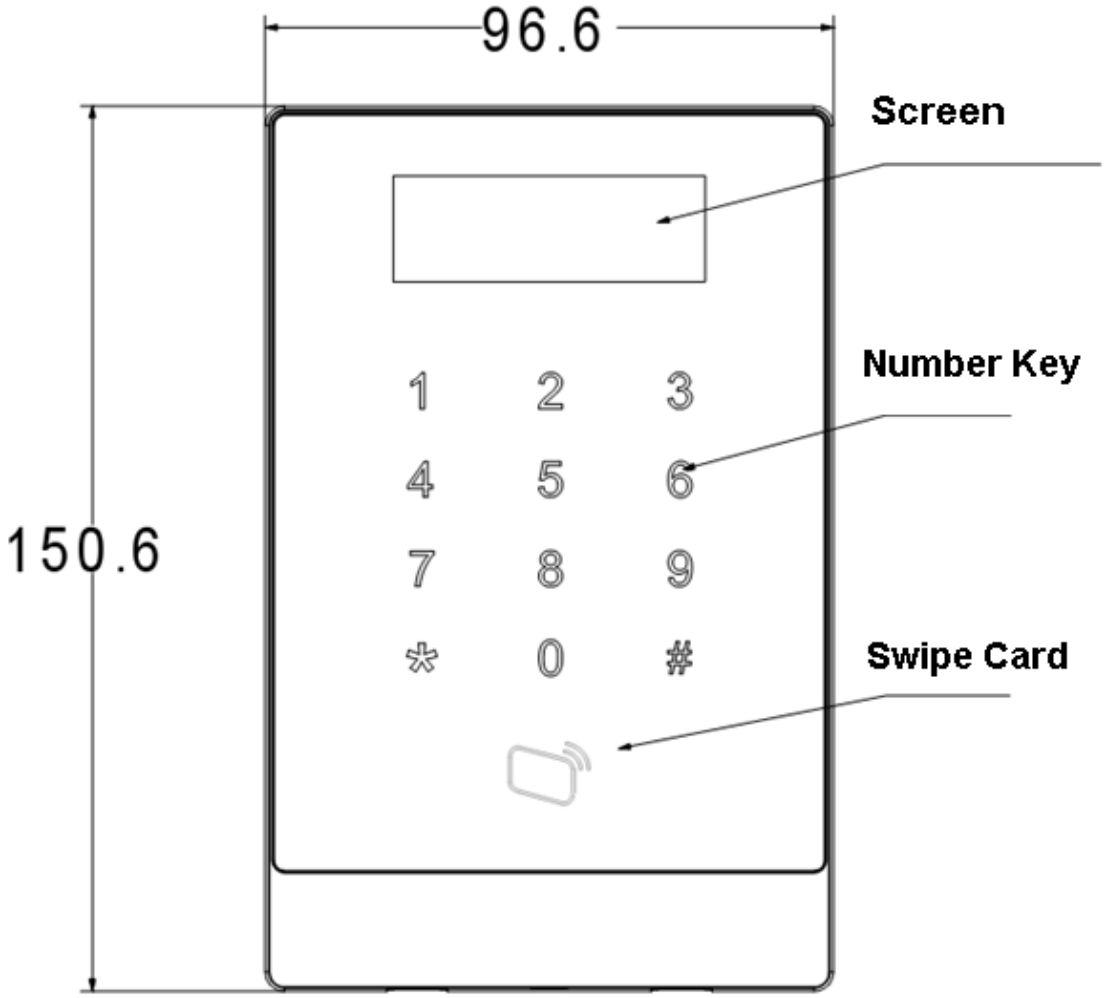

Figure 2-2

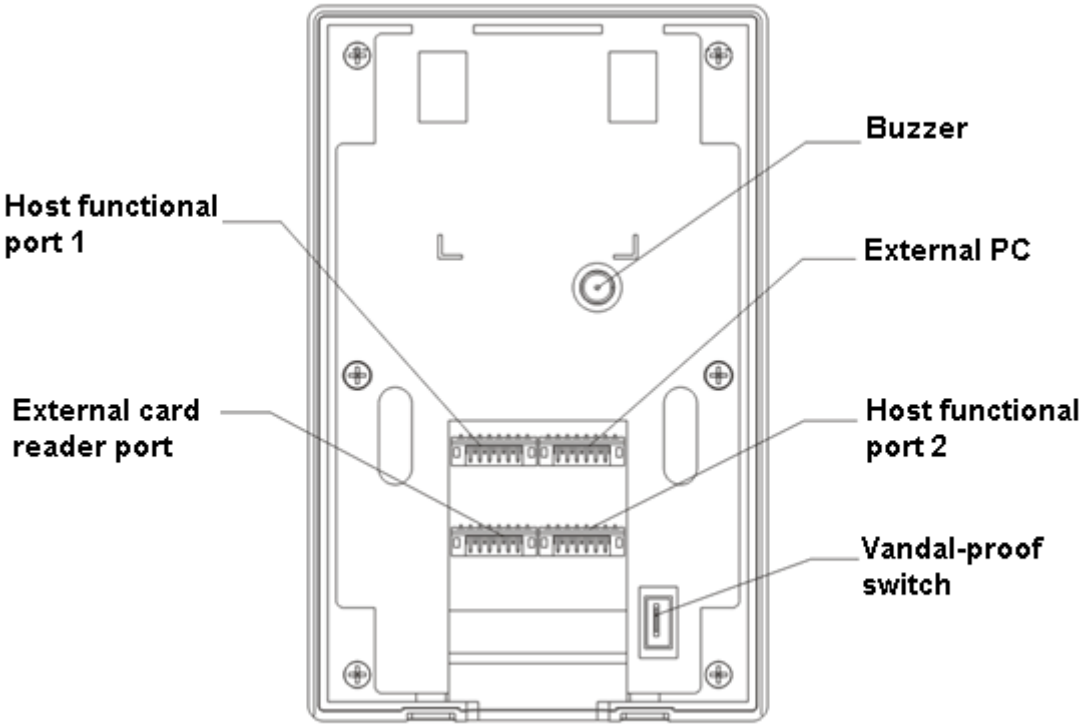

Figure 2-3

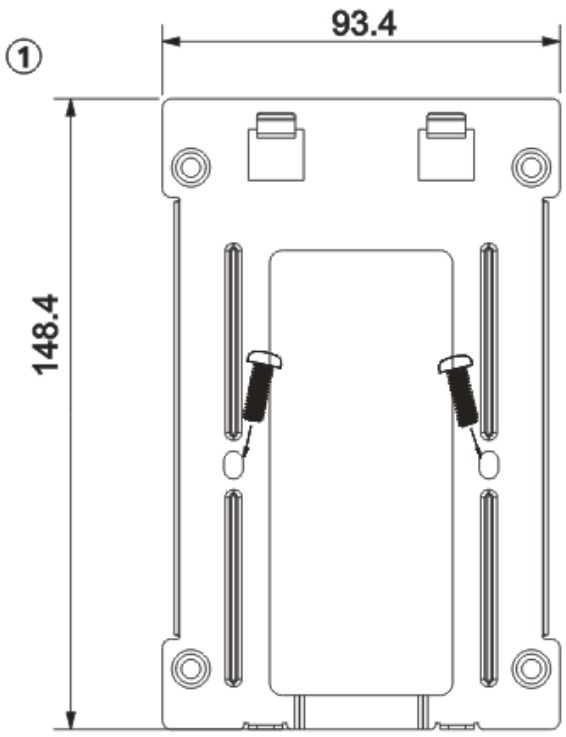

Figure 2-4

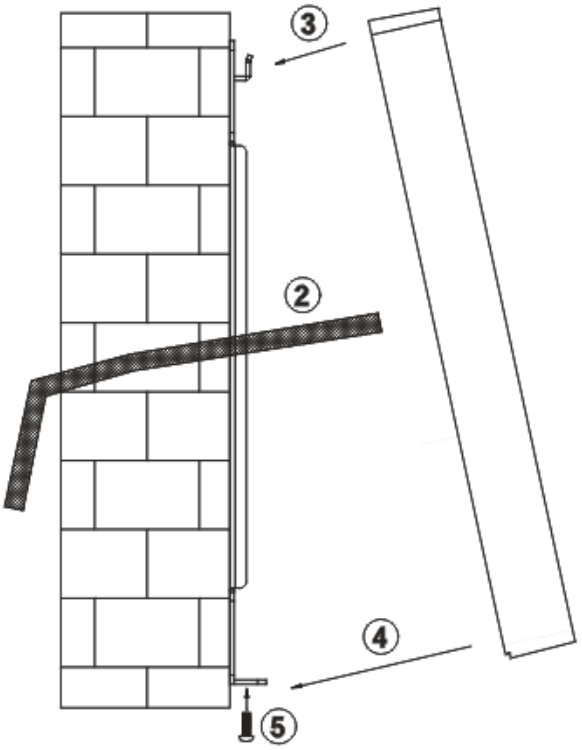

Installation step:

Step 1. Fix installation bracket on wall or inside 86 box.

Step 2. Connect device wire and plug each wiring port.

Step 3. Make the device top toward slot on installation bracket.

Step 4. Joint device and installation bracket.

Step 5. Use screw to secure them from bottom.

3 Structure

3.1 System Structure

Figure 3-1

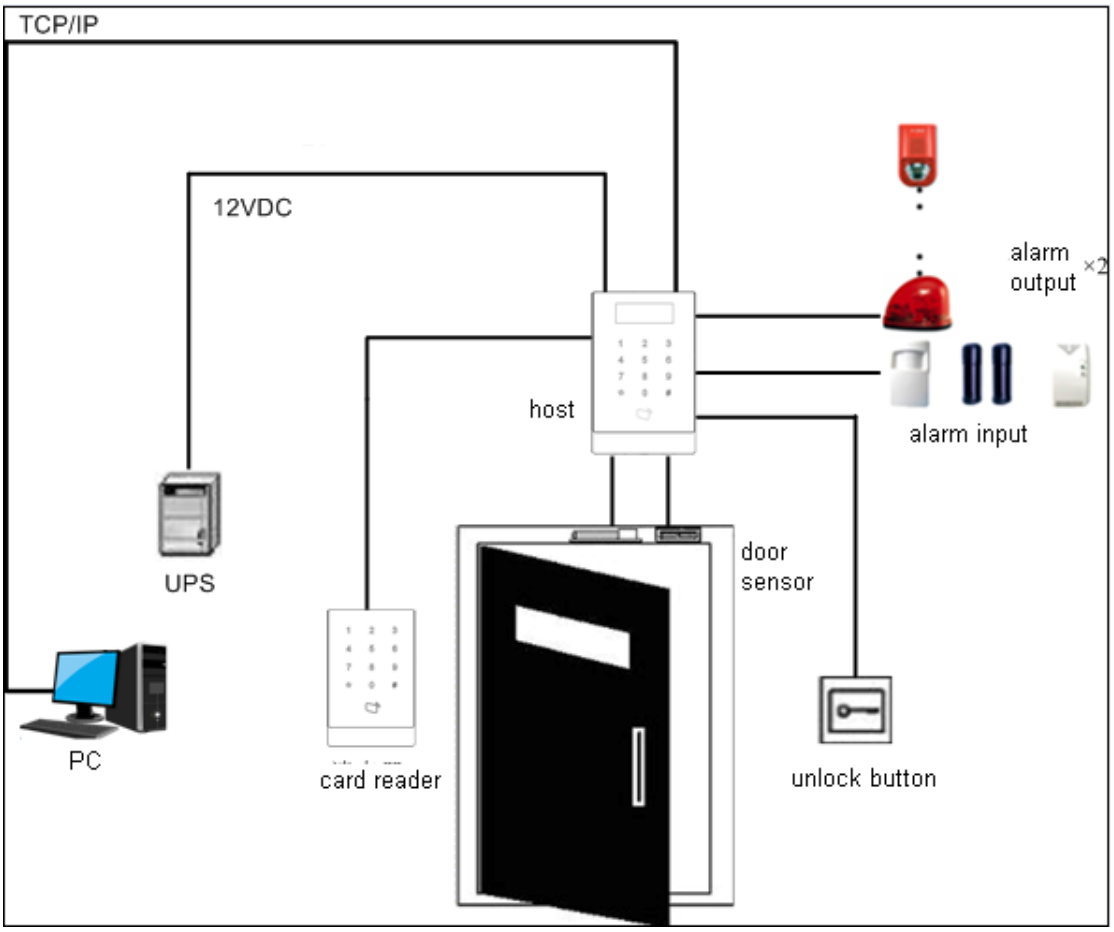

3.2 3.2 Wiring

Wiring of the device is shown below.

Figure 3-2

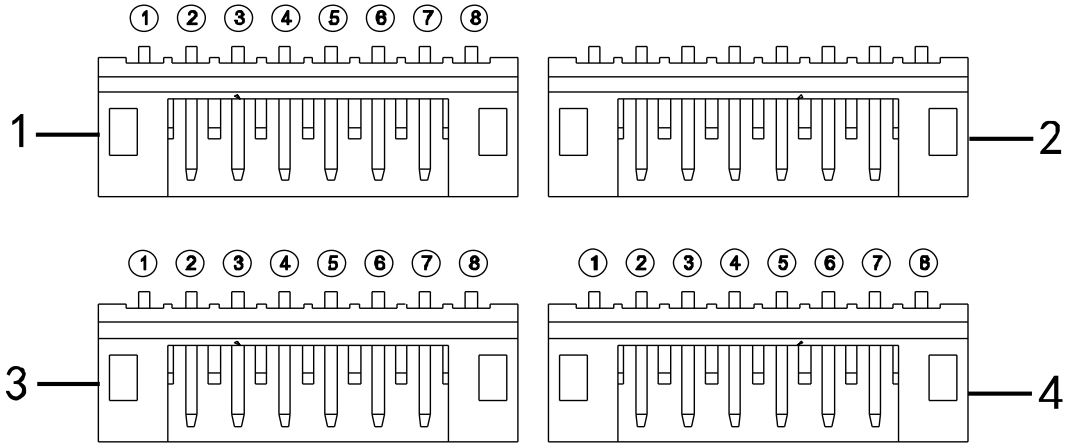

Figure 3-3

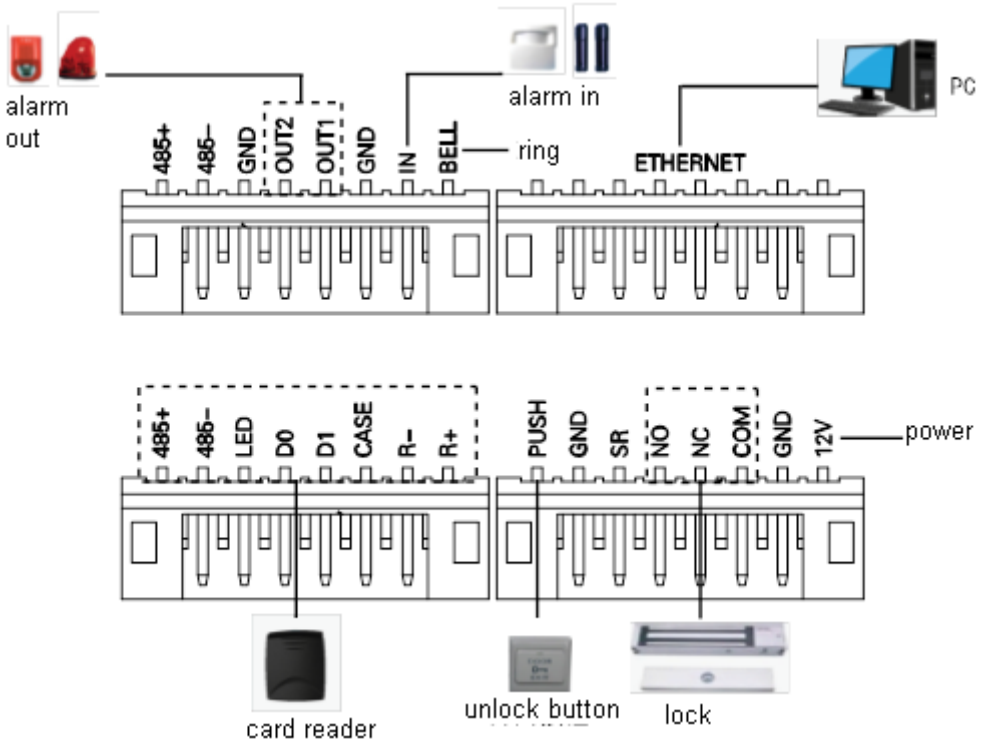

Wiring ports are shown below.

Figure 3-4

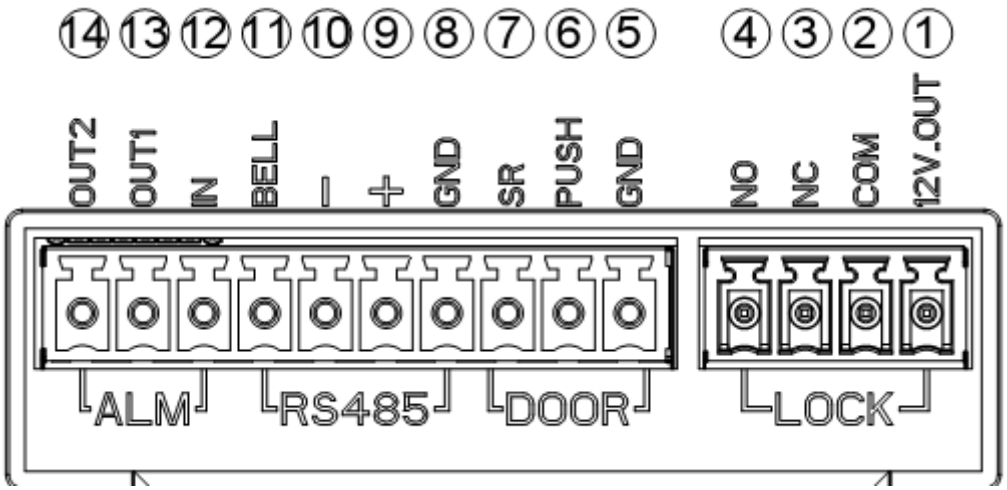

Table 3-1

No.	Port No.	Note
1	①485+	RS485+
	②485-	RS485-
	③GND	Connect GND
	④OUT2	Alarm output 2（5V relay switch），external connect to voltage not over 12V
	⑤OUT1	Alarm output 1（5V relay switch），external connect to voltage not over 12V
	⑥GND	Connect GND
	⑦IN	Alarm input
	⑧BELL	Ring control
2		TCP/IP，network port
3	①485+	RS485+，485 card reader
	②485-	RS485-，485 card reader
	③LED	LED_OUT，Weigand card reader
	④D0	D0，Weigand card reader
	⑤D1	D1，Weigand card reader

No.	Port No.	Note
	⑥CASE	Card reader protection alarm
	⑦R-	Connect GND
	⑧R+	12V card reader power
4	①PUSH	Connect unlock button
	②GND	Connect GND
	③SR	Door sensor check
	④NO	Door lock NO end
	⑤NC	Door lock NC end
	⑥COM	Door lock COM end
	⑦GND	Connect GND
	⑧12V	12V power input

4 4 Function Setting

4.1 Login

Login interface step:

Step 1. Plug in power, device is going to boot up.

Step 2. Press # button, screen displays project password.

Step 3. Input project password, and press # button to enter main interface.

Default password is “88888888”.

You can select to enter user management, unlock mode, period setup, system setting, system reboot and local info as main menu.

- Press 【2】 button as up.
- Press 【8】 button as down.
- Press 【#】 button to enter or confirm.
- Press 【*】 button to return or exit.

4.2 User Management

You can add or delete card, password.

Table 4-1

Card Type	Note
General card	General user card. When you add card, system will ask if set card password, period and term of validity.
VIP card	VIP user card. It warns service personal when cardholder enters. When you add card, system will ask if set card password, period and term of validity.
Guest card	When you add guest card, you need to set usage times. So when it exceeds this limit, the card becomes invalid.
Patrol card	Patrol card can only swipe card at patrol spot but cannot unlock. When you add card, system will ask if set card password, period and term of validity.
Blocklist	When you swipe card on blocklist and enters, it warns service personal. When you add card, system will ask if set card password, period and term of validity.
Forces card	Forced card becomes valid after you set forced alarm. You can swipe this card to unlock, but an alarm will be send to center.

Note:

All of these cards will be sent to center, management platform will process according to card type.

Password user represents user who input password in setup to enter.

Note:

- Card user has not set password, and you shall set unlock mode to card, card or password in order to enter.
- Card user set card password, and you shall set unlock mode to card, card + password, card or password in order to enter.
- User, who set period, can only unlock door within designated period.
- Password user, shall set unlock mode to card or password, password in order to enter.

4.2.2 Add User

4.2.2.1 Add Single Card

For example, you want to add a new card.

Step 1. In main interface, press 【2】or【8】 key to select user management, press 【#】 key.

Step 2. Press 【2】or【8】 key to move up or down, select add user and press【#】key.

Step 3. Press【2】or【8】 key to move up or down, select add care and press【#】key.

Step 4. Press【2】or【8】 key, to move up or down, select single card and press【#】key.

Step 5. Press【2】or【8】 key to move up or down, select normal card and press【#】key.

Step 6. Use key to input card no. or place card at swiping area to scan. Newly added card no. will be displayed on screen.

Step 7. Press【#】key. System asks if you want to bind card with password.

Step 8. Choose:

- Yes: Input 6-digit password.
- No: System asks to set period.

Step 9. Press【#】key, set time period and press 【#】key.

Step 10. Press【#】, set term of validity and press 【#】. When you finish setup, system asks if you want to save.

Step 11. Press【#】to save.

4.2.2.2 Add Continuous cards

For example, you want to add continuous cards.

Step 1. In add card interface, press 【2】or【8】 key to select add continuous cards, press 【#】 key.

Step 2. Press【2】or【8】 key to move up or down, select normal card and press【#】key.

Step 3. Input quantity of cards, press【#】key.

Step 4. Input card number of first card or swipe the first card, and press 【#】key. System asks to bind password.

The following steps are similar to Ch 4.2.1.1.step 8 to 11.

4.2.2.3 Add Password User

To add password user:

Step 1. In add user interface, press 【2】or【8】 key to move up or down, select add password, and press【#】key. System displays no. and password.

Step 2. Input password, and press 【#】key. Password must be 6 digits. System asks to save or not.

Step 3. Press 【#】 to save.

4.2.3 Delete User

4.2.3.1 Delete Card User

You can delete a single card, continuous cards or all cards user.

To delete a single card:

Step 1. In user management interface, press 【2】or 【8】 key to select delete user, and press 【#】 key.

Step 2. Press 【2】or【8】 key to move up or down, select delete card and press【#】key.

Step 3. Press【2】or【8】 key, to move up or down, select single card and press【#】key.

Step 4. Input no. of card to delete, place the card at swiping area, and press【#】key. System asks if to delete it or not.

Step 5. Press 【#】key to delete single card.

To delete continuous cards:

Step 1. In delete card interface, move up or down to select continuous card, and press 【#】 key.

Step 2. Input quantity to delete, and press 【#】.

Step 3. Input first card no. or place it on swiping area, and press【#】key. System asks if to delete it or not.

Step 4. Press【#】key to confirm. System shows deleted result and quantity.

To delete all cards:

Step 1. In delete card interface, move up or down to select all cards, and press 【#】key. System asks if to delete all or not.

Step 2. Press 【#】key to confirm. System says deleted successfully.

4.2.3.2 Delete Password User

You can delete a single password user or delete all password users.

To delete a single password user:

Step 1. In delete user interface, press 【2】or 【8】 key to select delete password, and press 【#】 key.

Step 2. Press 【2】or【8】 key to move up or down, select single password and press【#】 key.

Step 3. Input no. of password user to delete, and press【#】key.
System asks if to delete it or not.

Step 4. Press 【#】key to delete.

To delete all password users:

Step 1. In delete password interface, press 【2】or 【8】 key to select all password, and press 【#】 key. System asks if to delete it or not.

Step 2. Press 【#】key to delete.

4.3 Unlock Mode

Unlock mode includes card, password, card+password, card or password and by period.

To set:

Step 1. In main interface, press【2】or 【8】key to move up or down, select unlock mode, and press【#】. Enter unlock mode setup page.

Step 2. Press【2】or 【8】 key to select mode to set, and press 【#】key. When it is selected, there will be a √ next to the mode.

4.4 Period Setup

You can set unlock period, including card swiping period, holiday period and mode period.

4.4.1 Card Swiping Period

Card swiping period can be 0~127, a total of 128 periods. In each period, you need to set schedule for each day of week. When a new card is added, and set card swiping period, then user swipe card to unlock. Access control will judge if current time is within set period.
For example, set period 1, and the Monday to Sunday setup are shown below.

Table 4-2

Day	Period
Monday	0800-2200 (valid period: 08:00 to 22:00)
Tuesday	0800-2200 (valid period: 08:00 to 22:00)
Wednesday	0800-2200 (valid period: 08:00 to 22:00)
Thursday	0800-2200 (valid period: 08:00 to 22:00)
Friday	0800-2200 (valid period: 08:00 to 22:00)
Saturday	0800-2200 (valid period: 08:00 to 22:00)
Sunday	0800-2200 (valid period: 08:00 to 22:00)

To set card swiping period:

Step 1. In main interface, press 【2】or【8】key to move up or down, select time period setup, and press【#】key. Enter time period interface.

Step 2. Press【2】or 【8】 key to select card swiping period, and press【#】key.

Step 3. Input time period, and press 【#】key. Input any number between 0~127. Screen displays period.

Step 4. Modify period and press 【#】key.

Step 5. Set other periods. System asks if save it or not.

Step 6. Press【#】key, save config.

When new card set period 1, and user use it to unlock door. According to time period set, system judge if it is within unlock period. Other periods cannot unlock door.

Note:

Default period is full periods.

4.4.2 Holiday period

Holiday period can be 0~127, a total of 128 periods. When time is any period in 0~127, all cards or passwords cannot unlock door.

To set holiday period:

Step 1. In time period setup page, press【2】 or【8】 key to select holiday period, and press 【#】key.

Step 2. Input period, and press 【#】key. Input any number between 0~127, such as 1.

Step 3. Modify start time, press 【#】key.

Step 4. Modify end time, press 【#】key. System asks if to save or not.

Step 5. Press 【#】key to save.

4.4.3 Mode Period

Mode period has four periods per day, from Monday to Sunday, 7 days a week.
Note:
You shall allocate unlock mode by period, and then mode period config become valid. Unlock mode config refers to Ch 4.3.

To set mode period:
Step 1. In time period setup interface, press 【2】or【8】key, select mode period, and press 【#】. System displays periods of Monday to Sunday.
Step 2. For example select Monday, and press 【#】key. System displays period 1 page.
Step 3. Config period 1, press 【#】. System displays config mode interface.
Step 4. Press【2】or【8】 key, config mode 1, press【#】key.
Step 5. Config period 2, period 3 and period 4 in sequence. System asks if to save or not.
Step 6. Press 【#】key, save.
Step 7. Config Tuesday to Sunday periods.

4.5 System Settings

You can set IP, communication, date, unlock, alarm, password, main card and default in system settings.

4.5.1 IP Setup

Set current access control IP address, subnet mask and gateway.
Step 1. In main interface, press 【2】or【8】key to select system settings, and press【#】. You enter system settings page.
Step 2. Press 【2】or【8】key, select IP setup, and press【#】.
Step 3. Modify IP address, subnet mask and gateway, and press 【#】. System asks to save or not.
Step 4. Press 【#】, save config.

4.5.2 Date Setup

It sets current system date and time.
Step 1. In system settings page, press 【2】or【8】key, select date setup, and press【#】key.

Step 2. Set year, month, hour, minute and second. Press 【#】key. System asks to save it or not.
Step 3. Press 【#】key to save.

4.5.3 Unlock Time

It sets current unlock time.
Step 1. In system settings interface, press 【2】or【8】key, select unlock time, and press【#】.
Step 2. According to range of value, set unlock time, and press 【#】.System asks if to save or not.
Step 3. Press 【#】key to save.

4.5.4 Alarm Setup

You can enable alarm in alarm setup, and set door overtime. System alarm includes door overtime alarm, intrusion alarm, forced alarm and vandal-proof alarm.

Table 4-3

Alarm Type	Note
Door overtime alarm	When access control unlock time is greater than door overtime, it will alarm. Door overtime alarm need to set door overtime length, refer to Ch 4.5.5.2.
Intrusion alarm	Enter without card swiping or password, system alarms.
Forced alarm	Enter with forced card, system alarms. Refer to Ch 4.2.1.1.
Vandal-proof alarm	When device is forced to leave its position, vandal-proof button will alarm.

4.5.4.2 Enable Alarm

For example, to enable forced alarm:

Step 1. In system settings interface, press 【2】 or 【8】 key, select alarm setup, and press 【#】key.
Step 2. Press【2】or【8】key, select intrusion alarm, and press【#】key.
Step 3. Press 【2】or【8】key, select enable or disable. After you successfully selected, there will be a √.

4.5.4.3 Set Overtime

Door overtime alarm need to set overtime length:

Step 1. In alarm setup interface, press 【2】 or 【8】 key, select door overtime setup, and press【#】key.

Step 2. Config time, and press 【#】. System asks if to save or not.

Step 3. Press 【#】key to save.

4.5.5 Password Change

You can modify system project password. Project password is 8-digit.

Step 1. In system settings interface, press 【2】 or 【8】 key, select change password, and press【#】key.

Step 2. Input old password, press 【#】key.

Step 3. Input new password, and press【#】key.

Step 4. Input new password again, and press 【#】key. System asks if to save or not.

Step 5. Press 【#】key to save.

4.5.6 Main Card Management

You can use main card to add new user

4.5.6.1 Modify Main Card

Step 1. In system settings interface, press 【2】 or 【8】 key, select main card management, and press【#】key.

Step 2. Press 【2】or【8】keym select modify main card, and press【#】key.

Step 3. Input card no. or place the card on card swiping area to scan, and press【#】key. System asks if to save it or not.

Step 4. Press 【#】key, system says successfully set.

4.5.6.2 Add Card with Main Card

Is means using main card to add user of card. The added user is the same as user in user management. For example, add general card:

Step 1. In main card interface, press 【2】 or 【8】 key, select add card with main card, and press【#】key.

Step 2. Press【2】or【8】key, select general card, and press【#】. System asks if to bind password or not.

Step 3. Select according to actual condition.

- Yes: input password.
- No: system asks if to set period.

Step 4. Press 【#】, set period, and press 【#】key. Time period shall match card swiping period in time period setup. Refer to Ch 4.4.1.

Step 5. Press 【#】key, set term of validity, and press 【#】.
After you finish, system asks you to swipe main card.

Step 6. Place main card on card swiping area to scan. System prompts main card mode.

Step 7. Place card to add on card swiping area to scan. System will say successfully added.

4.5.7 Default

You can restore card swiping period, holiday period and mode time to default, or restore all info to default.

To restore card swiping period:

Step 1. In system settings interface, press 【2】 or 【8】key, select default, and press【#】key.

Step 2. Press 【2】 or【8】 key, select card swiping period, and press【#】key.
System asks if to restore or not.

Step 3. Press 【#】key to restore.

4.6 Reboot System

You can reboot current device host under system reboot.

Step 1. In main interface, press 【2】or【8】key, select system reboot, and press【#】. System asks if to reboot or not.

Step 2. Press【#】key to reboot, and press【*】to cancel.

4.7 Local Info

You can view current device card quantity, card swiping record, password quantity, alarm record, communication, IP address, MAC address and version info.

Step 1. In main interface, press 【2】or【8】key, select local info, and press【#】key.

Step 2. View card quantity, card swiping record, password quantity, alarm record, communication, IP address, MAC address and version info.

Note:

- **This manual is for reference only. Slight difference may be found in user interface.**
- **All the designs and software here are subject to change without prior written notice.**
- **All trademarks and registered trademarks are the properties of their respective owners.**
- **If there is any uncertainty or controversy, please refer to the final explanation of us.**
- **Please visit our website or contact your local service engineer for more information.**