Translated from Spanish to English - www.onlinedoctranslator.com

TVC enLínea.com
Soluciones de seguridad electrónica

Installation, configuration and connections guide Dual CommunicatorDSC ADC SEM 300

Reference model for the solution

ADC-SEM300AT-LAT



Introduction

Alarm.com's System Upgrade Module (SEM) is the most cost-effective and comprehensive solution for migrating compatible DSC PowerSeries PC1616, PC1832 and PC1864 panels from V4.2+ to Alarm.com services. The dual-communication SEM supports 4G LTE cellular networking and Broadband Ethernet (optional). This ensures a longer, safer and more reliable life for our aforementioned panels.

Equipment



Recommended Tools and Supplies

Note: These are not included.

- Screwdrivers: Small blade and Phillips
- Drill and bits for screws and/or wall anchors
- Ethernet cable
- Alphabetic Keyboard (Version 1.2+)

  -Alarm.com strongly recommends installing an Alpha Keypad to ensure failure to communicate (FTC) issues.
  The condition is shown.
- Four-conductor stranded wire, 22 AWG or larger

  The following table shows the maximum wire length for each gauge.

INDICATOR	MAXIMUM CABLE LENGTH
22 caliber	40 feet (12.2 m)
18 gauge	90 feet (27.4 m)

Prepare the system

Before turning off the system:

Check panel compatibility

The SEM supports PowerSeries PC1616, PC1832, and PC1864 firmware version 4.2+. Verify that your panel is compatible by checking the version printed on the direct PROM chip on a panel label.

Panel Version Check

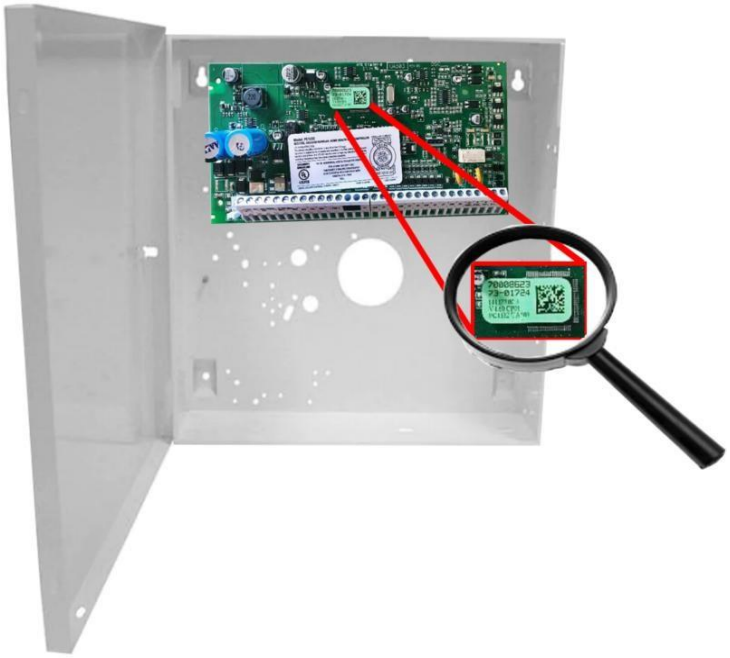

For more information about panel and keyboard compatibility, seeSEM-DSC PowerSeries - Panel and Device Compatibility.

Inspect for peripheral devices

1. Take inventory of all peripheral devices (wireless receivers, zone expanders, keypads, power supplies, etc.) wired to the system.
   - SEM - DSC PowerSeries: Energy Budget Calculator can be used to estimate the current consumption of connected devices.

2. Inspect the peripheral device cabling for loose ends and intermittent connections between the device and system.
   Note: The presence of issues with peripheral devices can often cause the SEM installation process to take longer than expected.

3. Verify that all peripheral devices are supervised by the panel. To verify that the peripheral devices are monitored by the panel
   a) Press [*] [8].
   b) Enter the installer code.
   c) Pressures [903]

   1. Reset supervision if necessary. To reset supervision:

      a) Press [*] [8].
      b) Enter the installer code.
      c) Press [902]

Process: Creating an Alarm.com account

Disarm and turn off the panel

1. Verify that the panel is disarmed and free of alarms, problems or system faults.
2. If you do not know the current installer code, check the installer code on the panel before turning it off.
3. Then disconnect the AC power and disconnect the backup battery to completely shut down the system.

to)

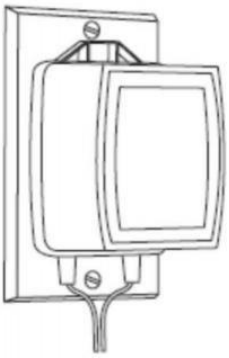

b)

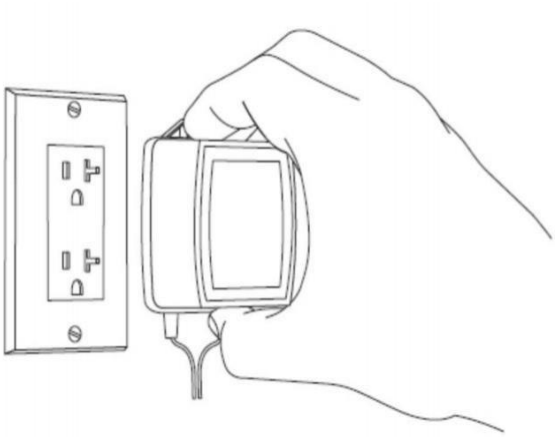

c)

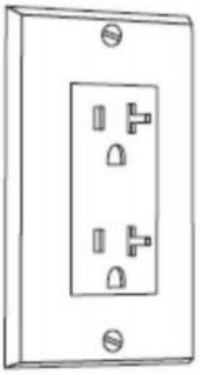

Create an account on Alarm.com

1. Create a new Alarm.com customer account using the Partner Portal or the Mobile Tech app. The IMEI located on the communicator will be needed to create this account.

Continuation of steps to integrate with Alarm.com

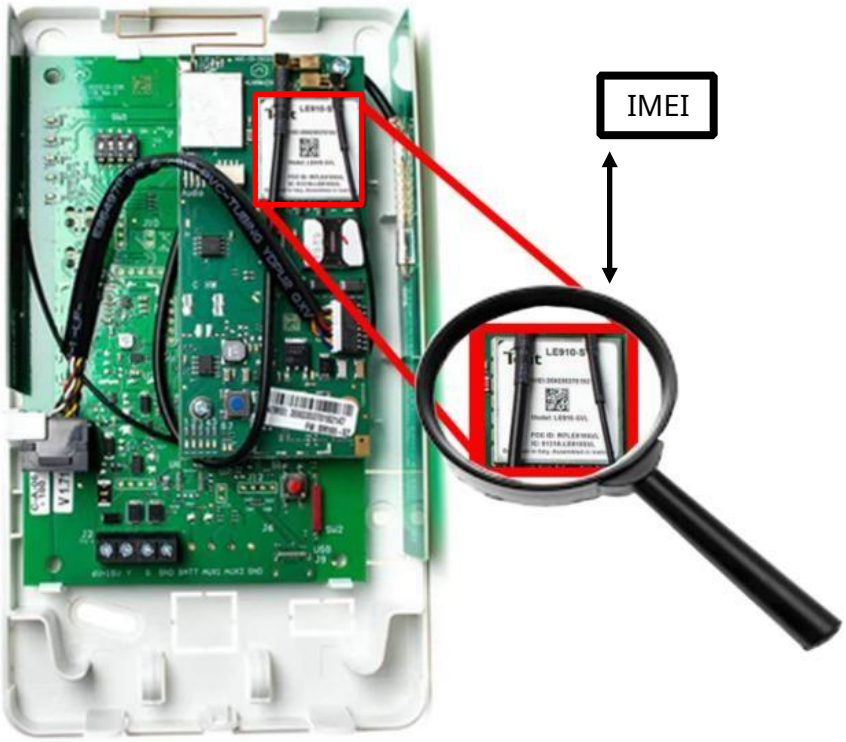

2. During the account creation process, you will be prompted to enter the current installer code on the panel. Alarm.com uses this code to access the panel programming and read the information.

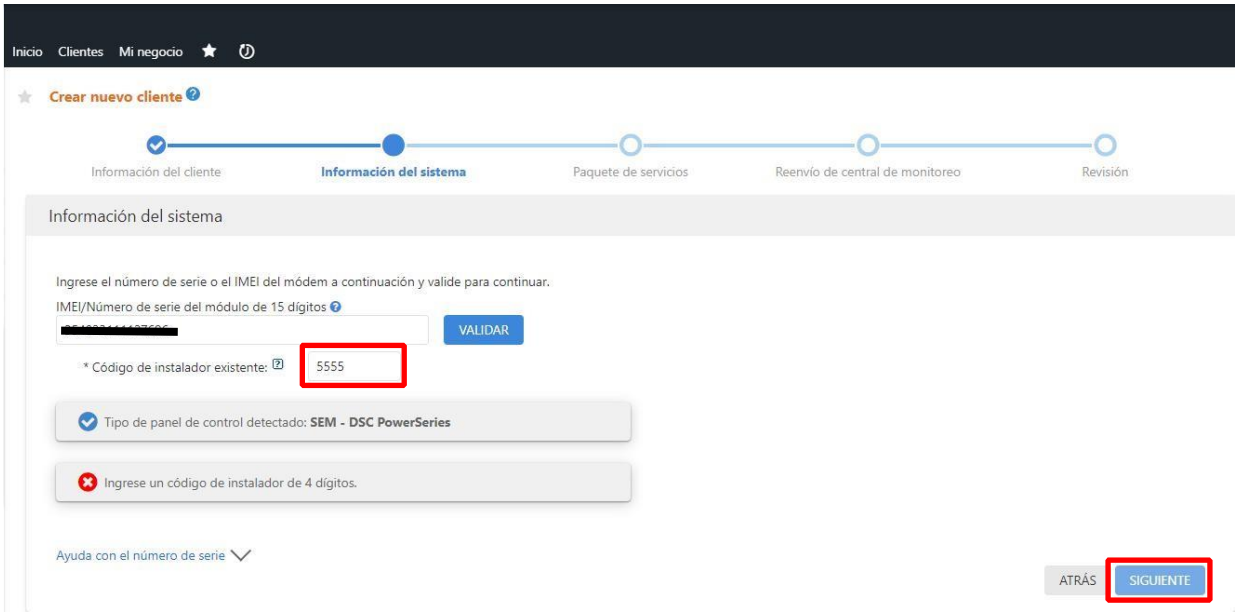

Quick guide appendix for creating a customer account on Alarm.com

3. At the end of the new customer creation process, you will be able to print or email a welcome letter to the customer, which concludes login information for the Alarm.com customer website.

For more information on how to create a customer account, see How to create a customer account from Alarm.com

After shutting down the system:

Delete third party communication

If there are third-party communicators installed or a POTS line (traditional copper-pair telephone line) connected to the panel, remove them.

The SEM is not compatible with POTS, IP/GSM devices, or other third-party communicators. Therefore, the SEM must be the only communication device installed to signal alarms to the monitoring station.

Connect the SEM

Mounting

Before mounting the SEM on the wall:

1. Evaluate how cables will be routed from the SEM to the panel.

2. Remove the release plastics. There are two routing options available: The side of the cabinet for side routing or the back of the cabinet for wall routing.

3. Check that the wiring of the main antenna, diversified antenna and ethernet cable are correctly placed.

Note: The Cat-M variant (indicated by the Telit ME910 radio) only requires the main antenna.

Installation recommendations

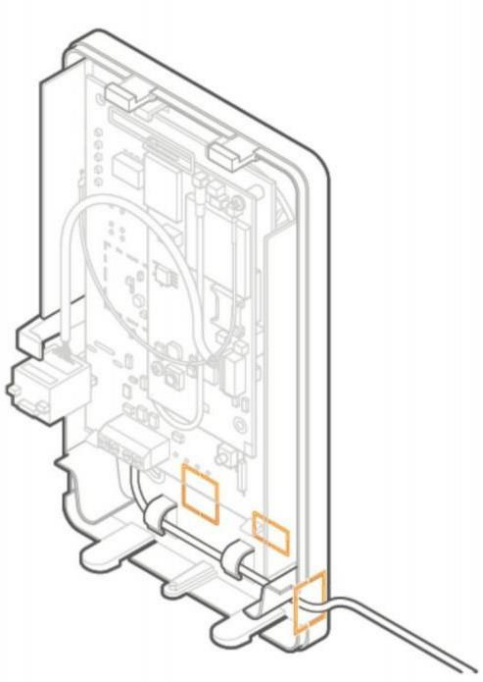

When you are ready to ride:

1. Press the thumb tabs located on the bottom of the case, then lift the top half of the case (cover to expose internal components).

2. Place the SEM enclosure backplate against the wall at the desired mounting location and mark the four mounting points. (holes)

3. Using the provided mounting screws and wall anchors (if necessary), place the first mounting screw through the top right hole in the housing. This screw will be used to hang the SEM from the wall during mounting and should not be tightened until the last step.

4. Place the second mounting screw through the bottom left mounting hole. This screw is used to level the cabinet on the wall and should not be tightened until the last step. A standard leveling device can be used to ensure the unit is level.

5. Place the third mounting screw through the top left hole of the cabinet. This screw must be fully tightened against the unit and wall before moving on to the next step.

6. Place the final mounting screw through the bottom right hole of the cabinet. This screw must be fully tightened against the unit and wall before moving on to the next step.

Important: This screw is critical to the wall handling functionality and should not be passed through.
High.

7. Fully tighten the first two mounting screws to the unit and wall to complete the mounting process.

Wall mounting recommendation and connection diagram

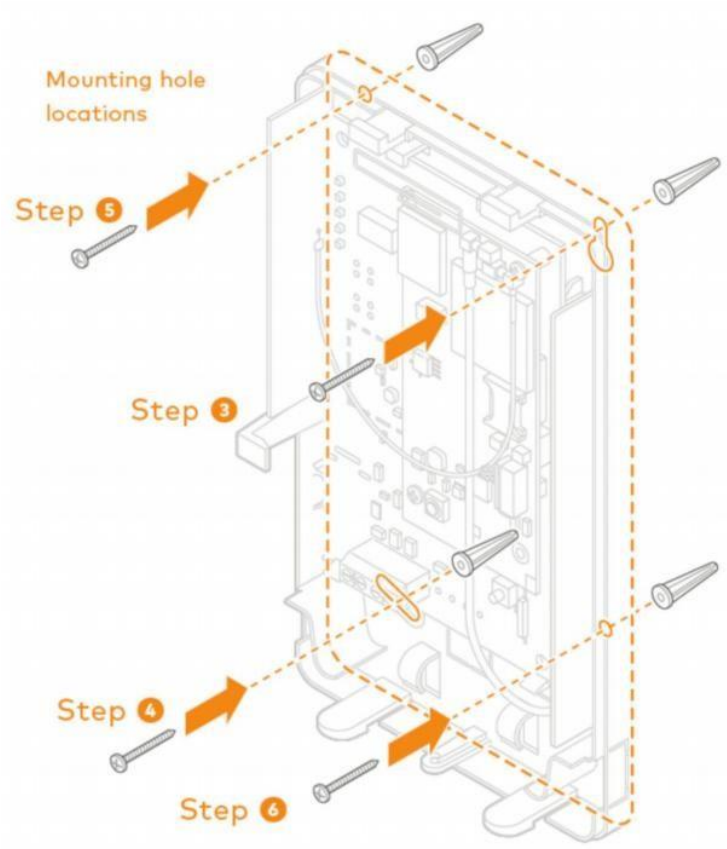

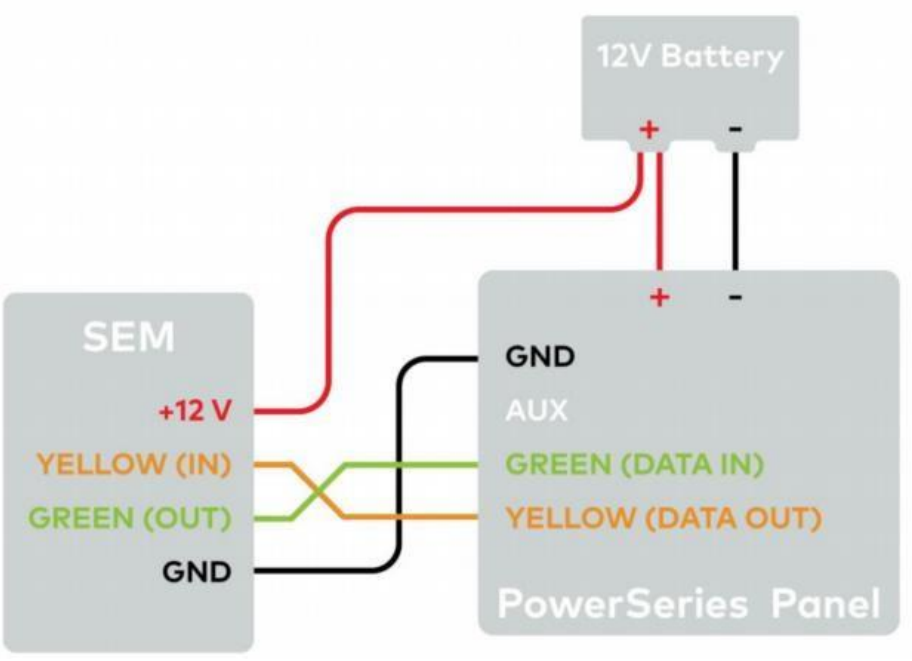

Connection diagram and steps to integrate communicator to PowerSeries panel

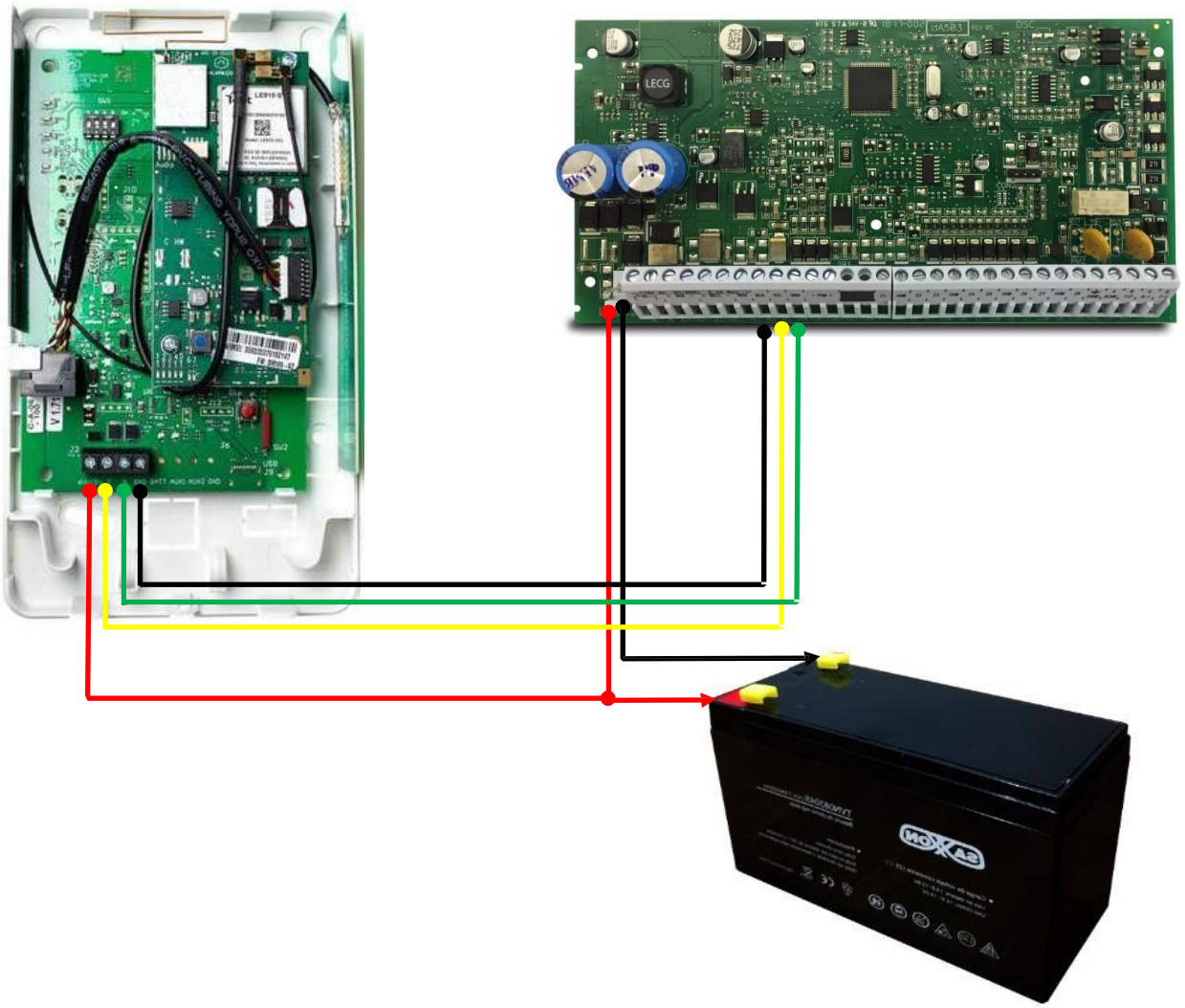

To wire the panel:

1. Connect the yellow/green data cables and red/black power cables to the designated locations on the SEM and panel.

2. Connect a network cable to the pre-installed ethernet connector to use dual-path communication. Changes to the local network may be required before the broadband path is activated. For more information about dual-path communication, see Set up dual-path communication for a panel remotely.

3. Remove the removable plastics from the side of the cabinet in the desired locations, then route the cables around the inside walls and out the sides of the cabinet.

Final view of the communicator wiring

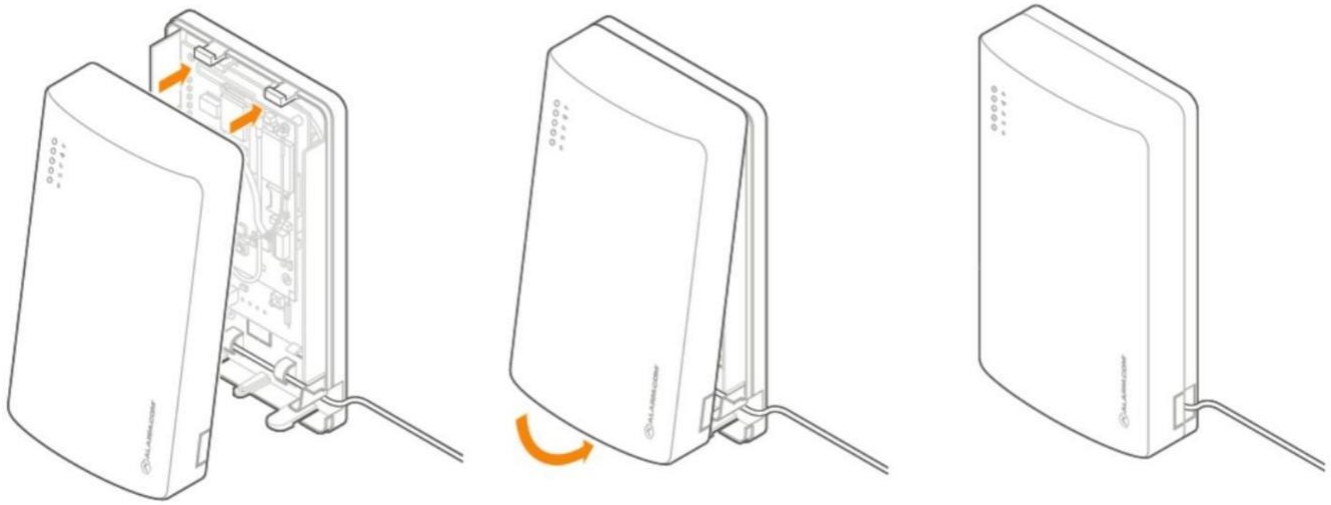

4. Before completing assembly, verify that the wiring connections are secure and all internal components are in place.

5. Then close the cabinet by sliding the cover into the mounting points on the top of the cabinet base and then swinging the cover down to snap the tabs into place.

SEM 300 integration process with Power series panel

Connect the backup battery and restore AC power to the panel. In order for the SEM to interact with existing zones on the system, it must read them from the PowerSeries panel. The SEM performs a zone scan to read this information.



SCANNING OF AREAS

~10 minutes

Do not touch the panel or keyboard

Next steps of the SEM 300 integration process with Power series panel

Zone scanning begins automatically within one minute after the panel is powered up and should take between 5 and 15 minutes, depending on the number of partitions and zones in the system.
Do not touch the panel, keypad or SEM at this time.

Zone scanning is complete when the green and yellow lights on the keypad remain solid. If you press any button on the keypad during zone scanning, the System Unavailable message will appear on the display. The date and time are shown on the display when zone scanning is complete.

Important: If the system previously communicated via telephone line, we recommend disabling telephone line monitoring (Section [015], turn off [7]) and removing phone numbers (Section 301 - 303)

.

Transmission of sensor names

In order for the SEM to read the sensor names stored in the panel and display them on Alarm.com, it must transmit the sensor names stored in the keypads. This must be done for every installation with an LCD keypad and is required even if there is only one keypad in the system.



To transmit the sensor tag, do the following:

[*] + 8 + [Installer code] + [*] To enter programming

Go to field [998] and press * to transmit the name of the sensors

Note: Once transmitted, sensor names are updated in the Partner Portal and MobileTech app. If sensor names are not up to date, request sensor names by selecting Request Sensor Names in the Partner Portal or MobileTech app.

Confirm communication

Before completing the installation, verify that the SEM is fully synchronized with the panel and communicating with Alarm.com by checking:

1. The correct devices are present in the account's equipment list in the Alarm.com MobileTech app.

Next steps of the SEM 300 integration process with Power series panel

2. The customer can view all user codes in the Alarm.com customer app or on the customer website, and the correct users are reported when arming or disarming at the panel.

3. All alarms are reported correctly to Alarm.com and the monitoring station.

It is also recommended to run a system check in the Alarm.com MobileTech app to verify account status and identify any other issues. For more information on how to perform a system check, please refer to the System Verification User Guide.

Additional information

Z-wave devices

Alarm.com recommends using the MobileTech app or the Partner Portal to complete the installation of any Z-Wave device. For more information on enrolling Z-Wave devices, see Manage Z-Wave devices on a SEM-DSC.

For more information on Z-wave communication, signal strength, and additional resources, see Z-Wave general information.

Installation Settings

In order for the SEM to communicate with the panel and report all alarms, certain settings must be configured on the panel. These settings are automatically changed during installation, so no further action is required by the installer.

Edit master code

Section [015], option [6] is disabled. This setting is required for the SEM to change the Master code through the User Programming menu [*5].

Arm/Disarm with problem

Section [021], option [8] is disabled. This setting is required for the SEM to arm the panel when there is an active trouble. This setting is available on certain versions of the DSC panel.

Swinger shutdown

Section [101], option [6] is enabled for zones programmed as group 01 Delay 1, but disabled for zones programmed as group 08 Fire 24 Hrs. This setting is required for the SEM to support the swing shutdown feature.

Report Configuration

Transmission delay

Section [101], enable option [7]. This setting is required for the SEM to report zone alarms immediately.

Reporting codes

Sections [320-349] do not determine or affect event reporting on Alarm.com.

Important: All monitoring station forwarding settings must be configured through Alarm.com monitoring settings.

Gateway LED Reference

The LEDs on the cabinet gateway can be used to indicate communication errors, network communication, and signal strength.



Troubleshooting: Trouble LED

Note: For advanced troubleshooting, open the cover to view the Alarm.com module LEDs. For more information on the module LEDs, seeSEM-DSC PowerSeries - Module LED Troubleshooting.



Trouble LED

The Trouble LED flashes 1 to 8 times in a four second interval to indicate specific error conditions.

NUMBER OF FLASHES	DESCRIPTION
1	The Alarm.com module is unable to communicate with the panel. Please perform a power cycle on the panel. If the error persists, please contact Aalarm.com CORE Technical Support.
2 then 4	The provisioning process for the Alarm.com module could not be completed. Power cycle the system. If the error persists, contact theCORE technical support of Alarm.com
2 then 5	The provisioning process for the Alarm.com module could not be completed because the module is currently located outside of the operator's core network.
3	The Alarm.com module is attempting to register to the cellular network. If this persists for more than a few minutes, the module is having trouble registering. Check L4 for signal strength. If the signal strength is less than 2 bars, relocate the panel or use a remote antenna option.
4	The Alarm.com module is registered on the cellular network but was unable to connect to Alarm.com. If the error persists, please contact theAlarm.com CORE Technical Support
5	The module radio is not working properly. If this persists for more than a few minutes, the module may need to be replaced. This error is extremely rare, so check the module by flashing it 5 times.
6	This indicates an error only if it persists for more than one minute. Otherwise, it is an indication that the module is dealing with an unusual condition regarding communication with the cellular network.
7	SEM is unable to access panel programming. Check panel wiring and installer code.
8	If this error persists, the account may have been configured incorrectly. Verify that the serial number being used matches the serial number used to create the account. If the serial numbers are the same, please contact Alarm.com CORE Technical Support.

Troubleshooting: Path LED

 LED route

The Path LED flashes to indicate the active communication path (cellular, broadband, or both) to Alarm.com.

FLASH PATTERN	DESCRIPTION
Long, steady blink (~2 seconds)	The cellular communication route is active
Long blink (~5 s) followed by a short blink (~0.2 s)	Both cellular and broadband communication routes are active
Short, steady blink (~0.5 seconds)	The broadband communication path is active. This should also be accompanied by an error LED flash.
Does not flash	Both communication paths do not communicate. This should also be accompanied by an error LED flash.

 Signal LED

The Signal LED flashes to indicate the cellular signal strength (0 to 6 bars).

 LED Panel

The Panel LED flashes with each communication with the panel.

 Power LED

The power LED lights up steadily when power is supplied.

Troubleshooting

Communication to Alarm.com or monitoring station

If there is no activity present in the event history or the account is not sending signals to Alarm.com:

Communication test

1. Initiate a communication test from the SEM by pressing [#] + [987] + [*] to initialize communication with Alarm.com or verify that the module is communicating on the cellular network.

2. For this test to send a signal to the monitoring station, verify that Telephone Test is selected as the Event to Forward in the client monitoring settings. For more information on updating monitoring settings, seeChange monitoring settings on a customer account.

List of client equipment

If the device list is empty in the MobileTech app or on the Partner Portal devices page, the SEM may be having trouble communicating with the dashboard. To resolve:

1. Check and remove any incompatible devices. For information on incompatible devices, seeAre there any devices incompatible with the SEM-DSC PowerSeries?

2. Check that all wiring is correct and secure.

3. Re-synchronize the installer code if a zone scan does not initiate upon power up.
   a) To resynchronize the installer code, use the keypad to change the installer code to a new, unique code.

   b) After resynchronizing the installer code, reboot the panel and verify that a zone scan has been initiated.

4. Verify that the panel is disarmed and then request an updated equipment list using the MobileTech app or the Partner Portal. Verify that the firmware version is displayed correctly. For more information on requesting an updated equipment list, seeRequest an updated sensor list and system status.

5. Verify that zone scanning has started in the event history via mobile technology or the partner portal. There should be zone scanning event messages in the history.

   Note: The ready light may be off or flashing during the zone scanning process. **Customer User Codes**

If user codes are not visible, the SEM may be having trouble scanning the user codes programmed into the panel. To resolve:

1. Check that there is a list of equipment on the equipment page. If any equipment is not present, please check with theClient team list.

2. Verify that all user codes are present on the Client website or in the Client application.

Verifying user codes

Note: Any duplicate or sequential user codes (e.g. 4567 and 4568) will be removed during the process of scanning user codes.

3. Arm and disarm with all user codes locally.

4. Verify that all user codes are present on the Client website or in the Client application.

5. Verify that the correct username and slot number are reported on the customer website or partner portal.

Keypad displays zone 32/34 open or communication failure

The highest zone (32 or 64) for the SEM-DSC PowerSeries is reserved for a FTC (Failure to Perform) zone. (communication). If the sensor names have not been transmitted, then the topmost panel area is shown as open.

Important: Since the highest zone of the SEM-DSC PowerSeries is reserved for an FTC zone, sensors cannot be enrolled in the highest zone. They may appear to be enrolled correctly, but the sensor is removed as soon as the sensor is triggered.

Questions?

If you have any difficulties with your installation, please contact theAalrm.com CORE Technical Support and we will be happy to help further.

Specs

Energy requirements	**12 VDC nominal, 130 mA (continuous) 2000 mA (peak instantaneous) maximum (of the panel battery)**
Cellular network	**4G LTE with 3G HSPA, 2G GSM backup**
Panel Interfaces	**Two keyboard BUS connections, power supply 12 VDC and ground**
Status indicators	**Five LEDs (red, green, yellow or blue)**
Operating temperature	**14 to 131°F (-10 to 55°C)**
Storage temperature	**, -30 to 140°F (-34.4 to 60°C)**
Humidity	**90% relative humidity non-condensing**
Box dimensions (length X width X depth)	**7.66 x 4.35 x 1.65 inches (19.46 x 11.05 x 4.19 cm)**
Case color	**White**

Regulatory information

Contains FCC: YL6-143470L, Model: ADC-470L

Changes or modifications not expressly approved by Alarm.com could void the user's authority to operate the equipment.

This equipment has been tested and found to comply with the limits for a Class B digital device, pursuant to part 15 of the FCC Rules. These limits are designed to provide reasonable protection against harmful interference in a residential installation. This equipment uses and can radiate radio frequency energy and, if not installed and used in accordance with the instructions, may cause harmful interference to radio communications. However, there is no guarantee that interference will not occur in a particular installation. If this equipment does cause harmful interference to radio or television reception, which can be determined by turning the equipment off and on, the user is encouraged to try to correct the interference by one or more of the following measures:

- Reorient or relocate the receiving antenna.
- Increase the separation between the equipment and receiver.

- Connect the equipment into an outlet on a circuit different from that to which the receiver is connected.
- Consult the dealer or an experienced radio/TV technician for help.

The operation is subject to the following two conditions:

1. This device may not cause interference.
2. This device must accept any interference, including interference that may cause undesired operation of the device.

This equipment complies with FCC RF radiation exposure limits set forth for an uncontrolled environment. This equipment should be installed and operated with a minimum distance of 20 centimeters between the radiator and your body.

All cables used for installation must not exceed 30 meters.

CI Regulations

Contains IC: 9111A-143470L, Model: ADC-470L

This device complies with Industry Canada licence-exempt RSS standard(s). Operation is subject to the following two conditions:

This device may not cause interference.

This device must accept any interference, including interference that may cause undesired operation of the device.

This section is in accordance with the Industry Canada Regulations applicable to license-exempt equipment. Operation is authorized subject to the following two conditions: (1) The equipment must not cause interference, and (2) the user of the equipment must accept any radio interference, even if the interference is capable of operating.

IFT Certification

IFT #: BLALAD23-34094

The operation of this equipment is subject to the following two conditions: (1) this equipment or device may not cause harmful interference, and (2) this equipment or device must accept any interference, including interference that may cause undesired operation.