KG Glass Mount Antennas

IMPORTANT:

Read the instructions completely before attempting to install your Larsen Kulglass Antenna.

PRE-INSTALLATION TIPS

- Do not install KG2/70 on front windshield as glass is too thick.
- Avoid installing antenna on curved glass.
- Do not install on glass with metallic content (passivated glass i.e. "solar-coat," "solar-cool"). Check with auto manufacturer.
- Do not mount antenna on any dark tinted area or on an area where an aftermarket tinting film has been applied.
- Do not install over in-glass AM/FM dipole antenna.
- To install antenna over defroster wires, the wires must be spaced at least one inch or more apart. Center the antenna over one wire, allowing it to pass between the horizontal coupling plate (see Fig. 1).
- Clean glass with water and a mild detergent if needed. Do not use ammonia-based or similar type of glass cleaner.

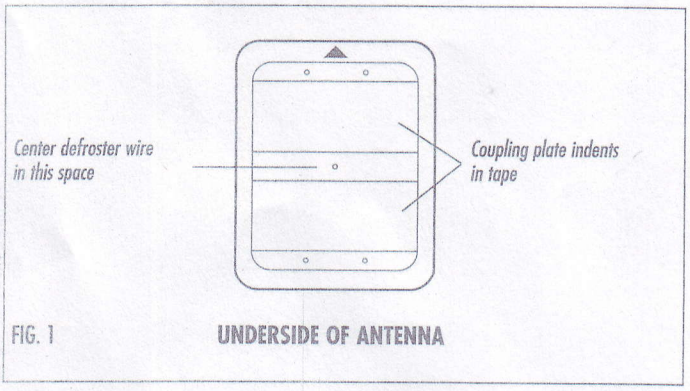

FIG. 1 **UNDERSIDE OF ANTENNA**

INSTALLATION

1. Vehicle glass should be near room temperature (70° F / 21° C) for installation.
2. Clean both inside and outside mounting areas with enclosed alcohol pad. Wipe off excess alcohol (do not allow alcohol to dry on the glass). If window film is apparent, use a mildly abrasive detergent-type cleanser.
3. Prepare outside mounting area by swabbing with enclosed liquid adhesion "enhancer." Allow enhancer to dry completely before applying outside coupler.
4. Peel protective liner from adhesive tape on the outside coupler. With the index arrow pointing up, mount the outside coupler starting at the top and rolling downward. From the inside of the window, observe whether the adhesive is making contact with edges and corners. Press firmly on all corners and in the center to ensure maximum contact. If the adhesive is not making contact, apply additional pressure where needed. Seal may be enhanced with a bead of clear silicone sealant. **Note:** 100% contact is not always possible with curved glass.
5. Remove protective liner from adhesive tape on inside coupler. With the index arrow pointing up, mount the inside coupler opposite of outside coupler.

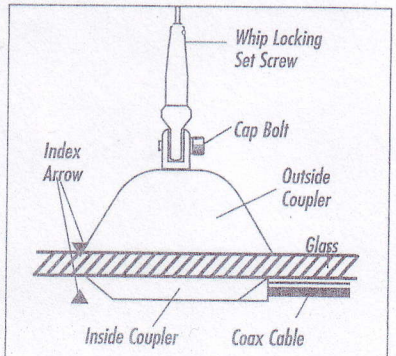

FIG. 2

6. Route coax to the radio/phone. (Except KGB.)
7. Position swing arm and whip to the vertical position and tighten cap bolt at swing arm/coupler connection. (For best results, do not install whip or expose to water for 24-72 hours.)

Pulse warrants to every user of a Larsen product that it will perform to its specified ratings and will be free of defects in materials and workmanship.

Pulse will repair or replace without charge any Larsen product which fails to meet this warranty within one year of the purchase date. Excluded is failure due to misuse such as striking objects, improper installation, and use beyond specifications.

Pulse will not be responsible for any incidental or consequential damages due to failure of a Larsen product under this warranty or any implied warranty.

LARSEN - A Pulse Brand
3611 N.E. 112th Avenue
Vancouver, Washington 98682
Phone: 800-268-3662
360-944-7551
Fax: 360-944-7556
www.larsen-antennas.com

Larsen®, Kulrod® and Kulduckie® are registered trademarks of Pulse Electronics.
Kulglass® Series U.S. Patent #4,764,773; KGB Series U.S. Patent #5,099,252; #5,155,494 - 11/99

KG Glass Mount Antennas

Pulse Electronics LARSEN ANTENNAS

PI00085, REV. D, 02/11, 5190.2270