IgniteNet

Welcome to MetroLinq™



Interference-Free Gigabit Wireless

Unboxing

After opening the box, you will find…

- MetroLinq™
- Bracket Kit
- PoE Power Supply
- Power Cable

Tools/Items Required

- 13 mm Socket Wrench
- Flat-Head Screwdriver
- Ethernet Cables
- (Optional) Alignment Scope ICC-SCOPE-9x50

For helpful training and user-case information, please go to ignitenet.com/support

Assembly

The MetroLinq™ bracket is designed for wall and pole mounting (25 mm - 80 mm pole diameter). Choose what is best for your location and select hardware accordingly.

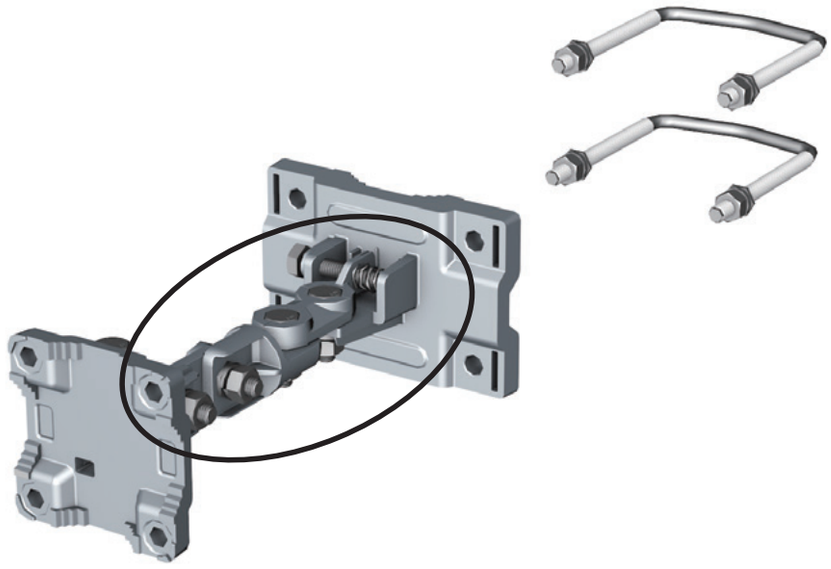

1. Ensure all four position-locking bolts are tight before installing.

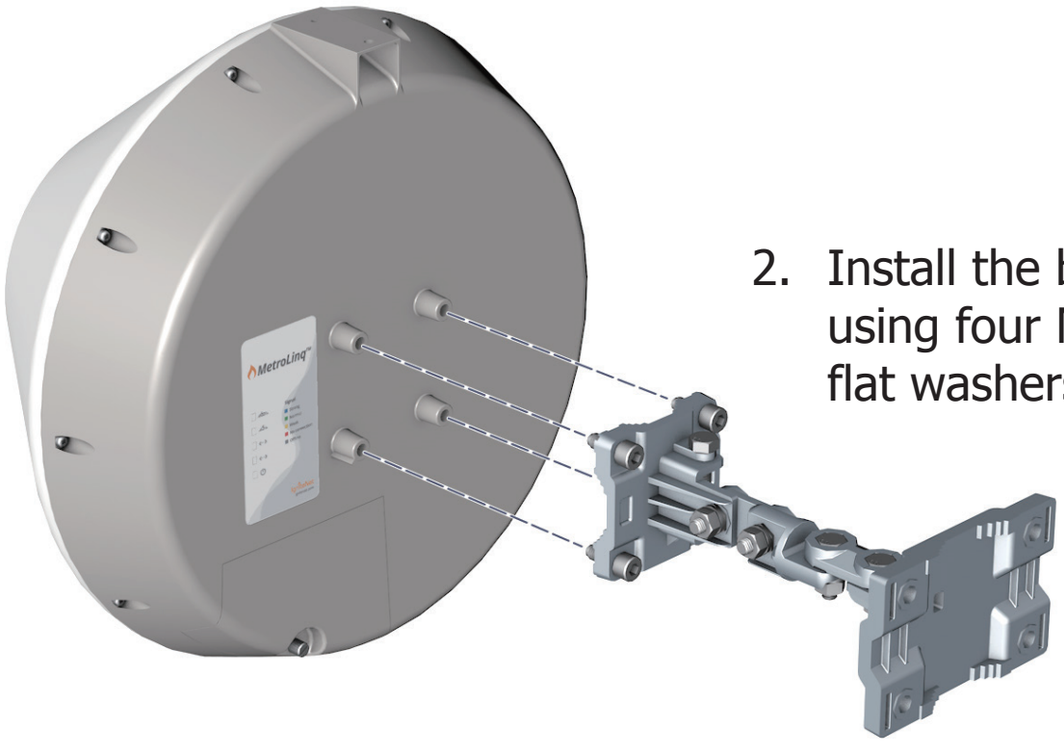

2. Install the bracket onto MetroLinq™ using four M8 bolts, lock washers, and flat washers.

Grounding

1. Ensure the structure on which the unit is to be mounted is properly grounded and in compliance with ETSI ETS 300 253.

2. Verify that there is a good electrical connection to a grounding point (no paint or isolating surface treatment). Use the included (M4) screw to attach a grounding wire (not included) to the grounding point on the unit, and then to ground.

CAUTION: The earth connection must not be removed unless all supply connections have been disconnected.



Power Up

1. Connect an Ethernet cable from the MetroLinq™ ETH0/PoE IN port (right-side RJ-45) to the PoE port on the power supply.



2. Connect Ethernet cable from the "LAN" port on the power supply to your LAN device.

3. Connect the power cord to a nearby AC power source.



Alignment

IgniteNet strongly recommends using the ICC-SCOPE-9x50 Alignment Scope for alignment. To install, place the scope on top of the MetroLinq™ housing and secure it with its thumb screw.

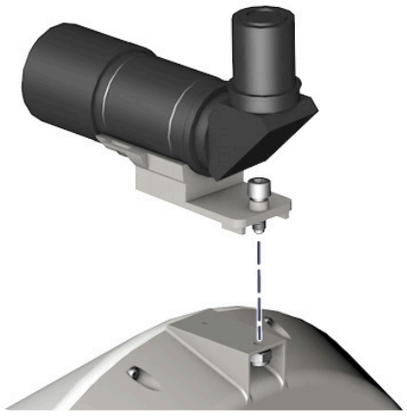

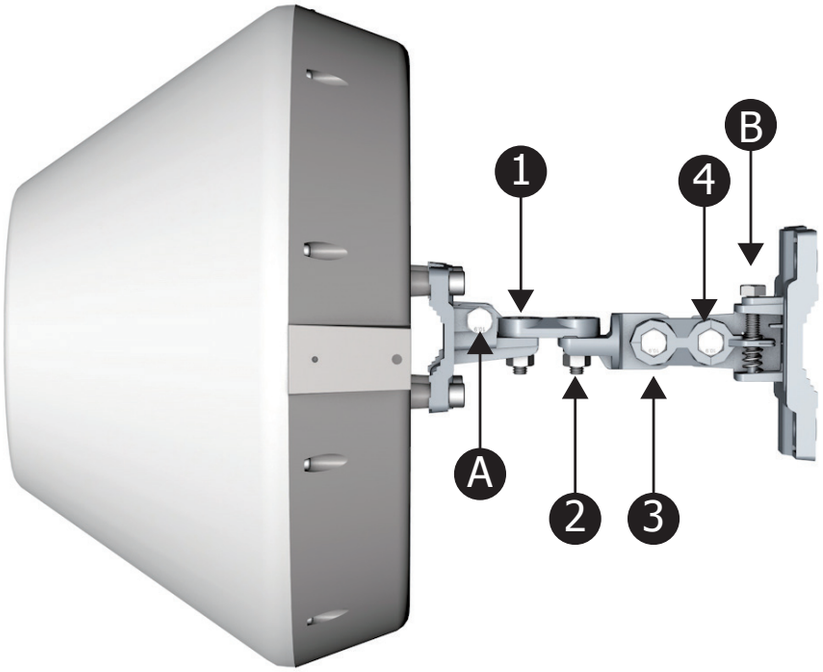

Note: Do not adjust bolts A and B without first loosening 1 and 4 respectively.

1. Loosen coarse adjustment bolts 2 and 3 and set initial alignment. Don’t worry, you don’t have to be too accurate yet. After you have set the coarse alignment, tighten bolts 2 and 3.
2. Loosen the horizontal fine-tune adjustment bolt 4. Use fine-tune bolt "B" to optimize the horizontal position. Re-tighten bolt 4.
3. Loosen the vertical fine-tune adjustment bolt 1. Use fine-tune bolt "A" to optimize the vertical position. Re-tighten bolt 1.
4. Initial alignment should be based on optical or visual alignment. After you achieve this, repeat steps 2 and 3 while watching the 60 GHz signal strength LED. Optimize position to the LED indicator.
5. Ensure all bolts are fully tightened, remove the alignment scope (if installed), and enjoy Gigabit interference-free wireless.

Software

1. To configure your MetroLinq, connect your computer to the device through the LAN port of the power supply or directly to the ETH1 port on the device. The default IP mode is DHCP client, so if the device obtains an address from a DHCP server on the network, then use that IP (you can use the Discovery Tool from the IgniteNet support site to find the DHCP address). If the device does not obtain a DHCP address, it reverts to the fallback IP of 192.168.1.20 and you can access it on that IP. Direct your web browser to the correct IP and log in.

2. After you have logged in, follow the steps in the Setup Wizard to configure the device for your network.



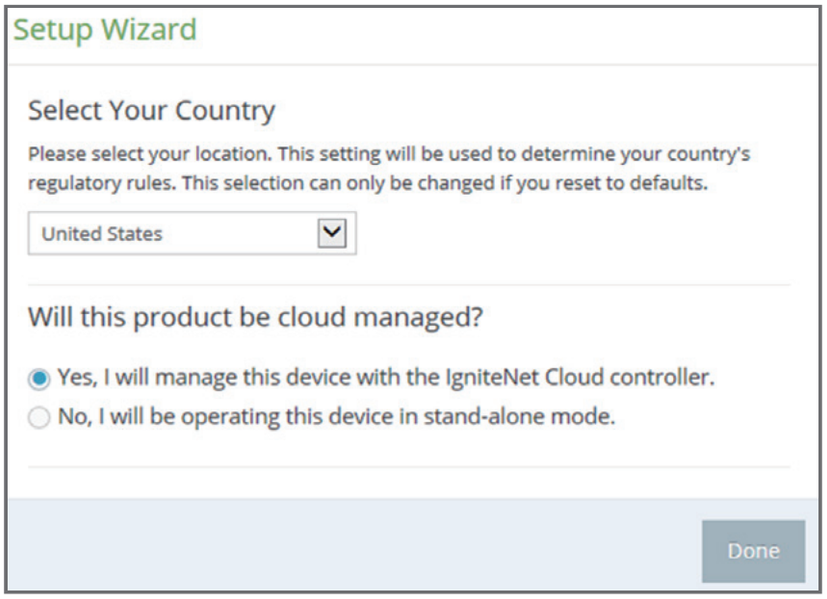

username: root
password: admin123

For more configuration details and training, please go to ignitenet.com/support

150200001244A R04