Fiber Optic Ethernet Media Converter Kit

VG4-SFPSCKT

BOSCH

en Installation Manual

Table of contents

1	Important Safety Instructions	4
2	Parts List	5
3	System overview	8
4	Install for an AUTODOME camera	9
5	Install for a MIC analog camera	13
6	Install for an EXTEGRA IP 9000 FX camera	14
7	Troubleshooting	18

1 Important Safety Instructions

Read, follow, and retain all of the following safety instructions. Heed all warnings on the unit and in the operating instructions before operation.

1. Clean only with a dry cloth. Do not use liquid cleaners or aerosol cleaners.
2. Adjust only those controls specified in the operating instructions.
3. Operate the unit only from the type of power source indicated on the label.
4. Use only replacement parts specified by the manufacturer.
5. Install in accordance with the manufacturer's instructions in accordance with applicable local codes.
   Use only attachments/accessories specified by the manufacturer. Equipment change or modification could void the user's guarantee or authorization agreement.



Danger!
High risk: This symbol indicates an imminently hazardous situation such as “Dangerous Voltage” inside the product.
If not avoided, this will result in an electrical shock, serious bodily injury, or death.



Warning!
Medium risk: Indicates a potentially hazardous situation.
If not avoided, this could result in minor or moderate bodily injury.



Caution!
Low risk: Indicates a potentially hazardous situation.
if not avoided, this could result in property damage or risk of damage to the unit.

You can view and print the full version of this Installation Manual with Adobe Acrobat Reader.
This user guide is the intellectual property of Bosch Security Systems; protected by copyright.

2 Parts List

AUTODOME

For an AUTODOME camera, the following parts are included in the kit of the fiber optic module:

Part	Description
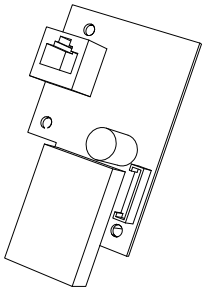	Fiber Optic Media Converter Module (with SFP socket)
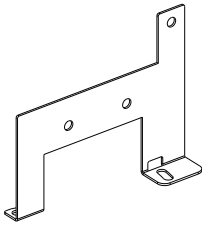	Metal adapter plate
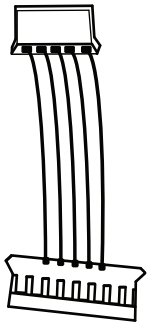	Power harness (black)
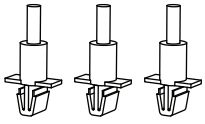	Three (3) standoff bosses
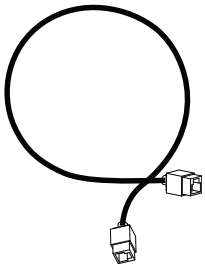	Ethernet patch (jumper) cable (blue) with RJ45 connectors
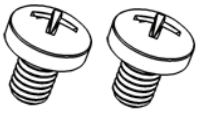	Two (2) M4 Phillips pan screws

MIC

For a MIC camera, the following parts are included in the kit of the fiber optic module:

Part	Description
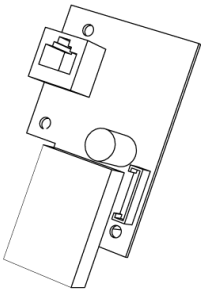	Fiber Optic Media Converter Module
	Fiber cable (black) with SFP-style connectors
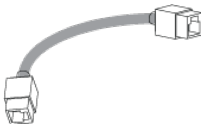	Ethernet patch cable (gray) with RJ45 connectors

EXTEGRA

For an EXTEGRA camera, the following parts are included in the kit of the fiber optic module:

Part	Description
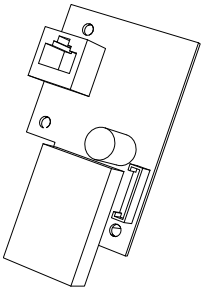	Fiber Optic Media Converter Module (with SFP socket)
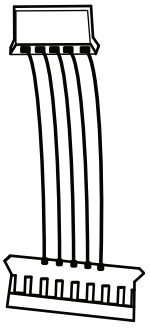	Power harness (black)

Part	Description
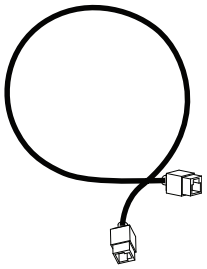	Ethernet patch (jumper) cable (blue) with RJ45 connectors

3 System overview

The VG4-SFPSCKT is a media converter module that provides an integrated fiber optic solution. The module is designed to accept any of the 10/100 Mbps Small Form-factor Pluggable (SFP) modules listed below, for use with Multimode optical fiber (MMF) or Single mode (SMF) optical fiber with LC or SC connectors.

The media converter module, along with the SFP module, is user-installed into:

- Any of the following AUTODOME power supply units:
  - VG4-A-PA1
  - VG4-A-PA2
  - VG4-A-PSU1
  - VG4-A-PSU2
- Any of the following MIC IP power supply units (for use with a MIC550, a MIC550IR, or a MIC612 analog camera):
  - MIC-IP-PS-115
  - MIC-IP-PS-24
  - MIC-IPIR-PS-115
  - MIC-IPIR-PS-230
  - MIC-IPIR-PS-24
- An EXTEGRA IP 9000 FX camera

The Fiber Optic module accepts the following SFP modules:

Sub-module	Fiber Type	Optical Interface
SFP-2	MMF	Duplex LC
SFP-3	SMF	Duplex LC
SFP-25	MMF	Single SC
SFP-26	MMF	Single SC



Notice!
The SFP module is not included with the VG4-SFPSCKT kit; it must be purchased separately.

The SFP-25/SFP-26 modules are counterparts; if you use one in the VG4-SFPSCKT module then you must use the other in the CNFE2MC head-end unit. For example, SFP-25 is used in the VG4-SFPSCKT module installed into a VG4 power supply. You must use the SFP-26 module in the CNFE2MC head-end unit.

The following chart lists the compatibility between the SFP modules:

SFP Sub-module used in VG4-SFPSCKT	Use this SFP Sub-module in CNFE2MC
SFP-2	SFP-2
SFP-3	SFP-3
SFP-25	SFP-26
SFP-26	SFP-25

4 Install for an AUTODOME camera

To install the Fiber Optic Media Converter Module (VG4-SFPSCKT) inside a VG4 Power Supply Box for an AUTODOME camera, complete the following steps.

1. Turn off the power to the VG4 power supply box and remove the cover.
2. Remove the 6-pin connector from the P106 connector inside the power supply box, if present.
3. Connect the supplied power harness (black) to the J103 socket on the power supply board, located below the Heater connector.

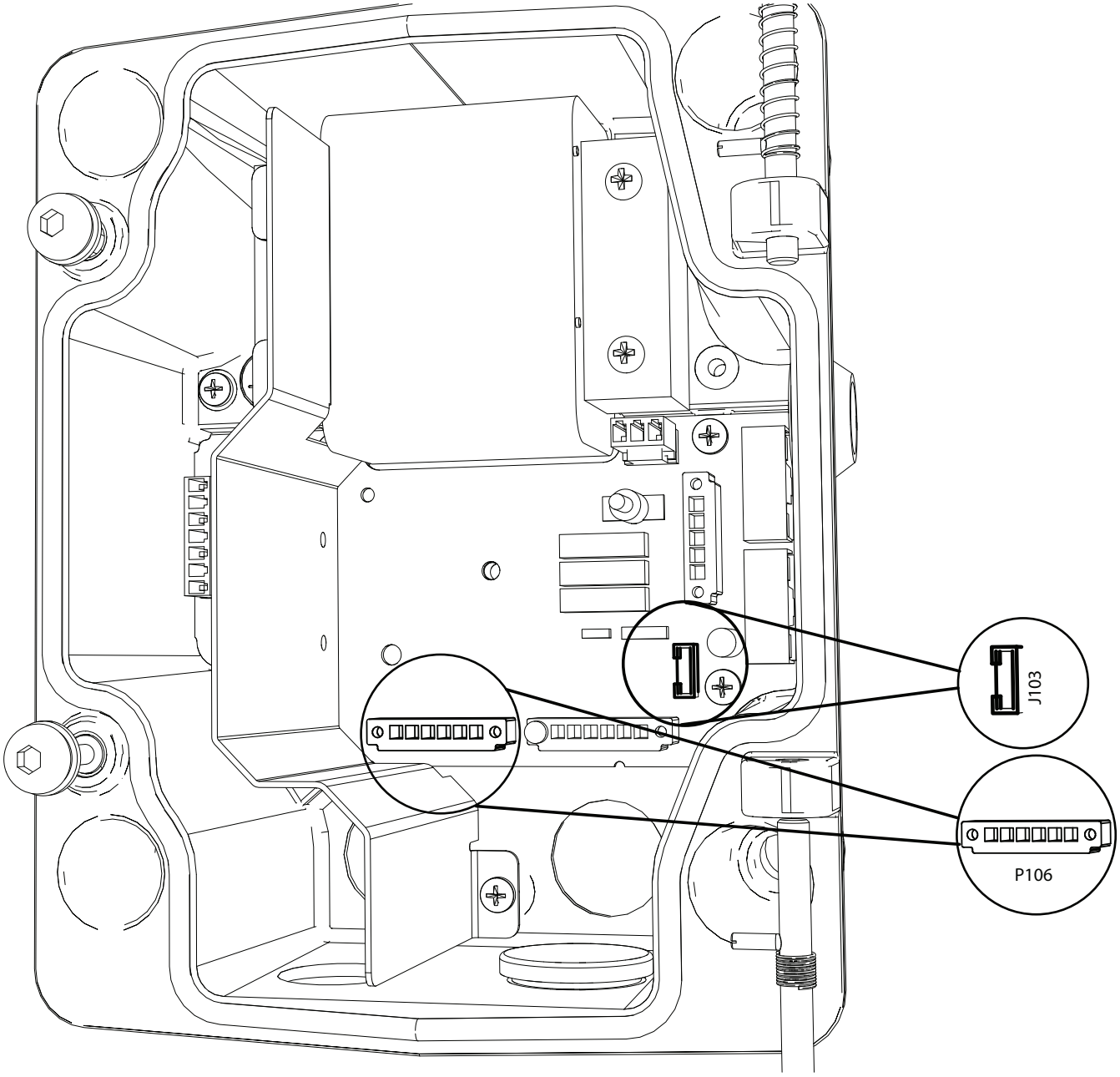

Figure 4.1: Locations of P106 and J103 sockets

4. Remove the rubber plug from the SFP module.

5. Align the standoff pins to the anchor holes on the base plate and on the fiber optic module, with the standoff pins in between the base plate and the fiber optic module, as illustrated in the following figure. Press the base plate and the fiber optic module onto the standoff pins until secure.

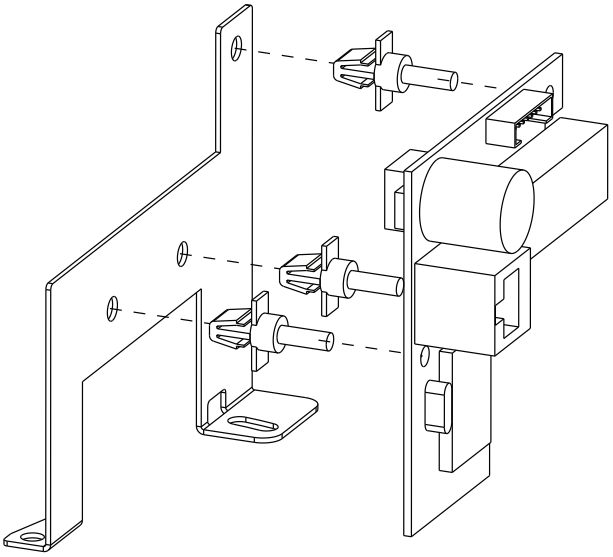

Figure 4.2: Placement of standoff pins between base plate and fiber optic module

6. Install the fiber board (attached to the metal base plate) in the power supply box as illustrated in the following figure. Secure the plate using the two screws.

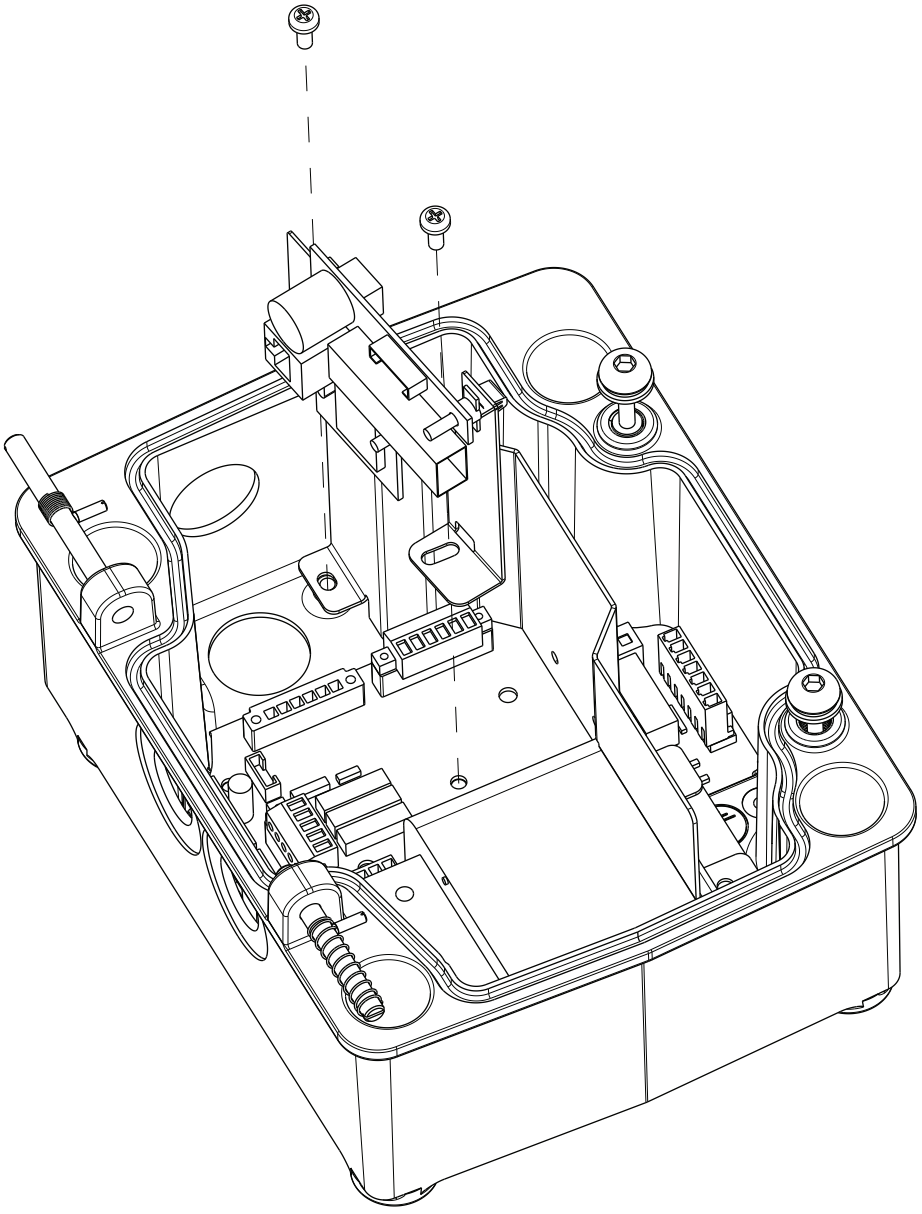

Figure 4.3: Attach base plate to power supply box

7. Insert the SFP module into the VG4-SFPSCKT module:
   Note: The SFP module is static sensitive. Use static handling procedures when installing or removing the module.
   – Ensure that the bale-clasp on the SFP module is up.

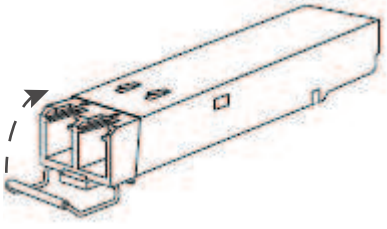

Figure 4.4: Move bale clasp up

   – Line up the SFP module with the port on the VG4-SFPSCKT module and slide it into the port until you hear the catches engage.
8. Attach the supplied power harness (black) to its connector on the fiber optic module.

9. Connect the RJ45 Ethernet patch cable (blue) to its socket on the fiber optic module. Attach the other end to the female mating connector in the AUTODOME pendant arm.
   Note: If installing a Pipe- or Roof-mounted camera, you must install Ethernet cable (with RJ45 connectors) long enough to connect the camera and the power supply box.
10. Route the appropriate fiber optic cable through the conduit hole (2) on the power supply box that is aligned with the VG4-SFPSCKT module (1).

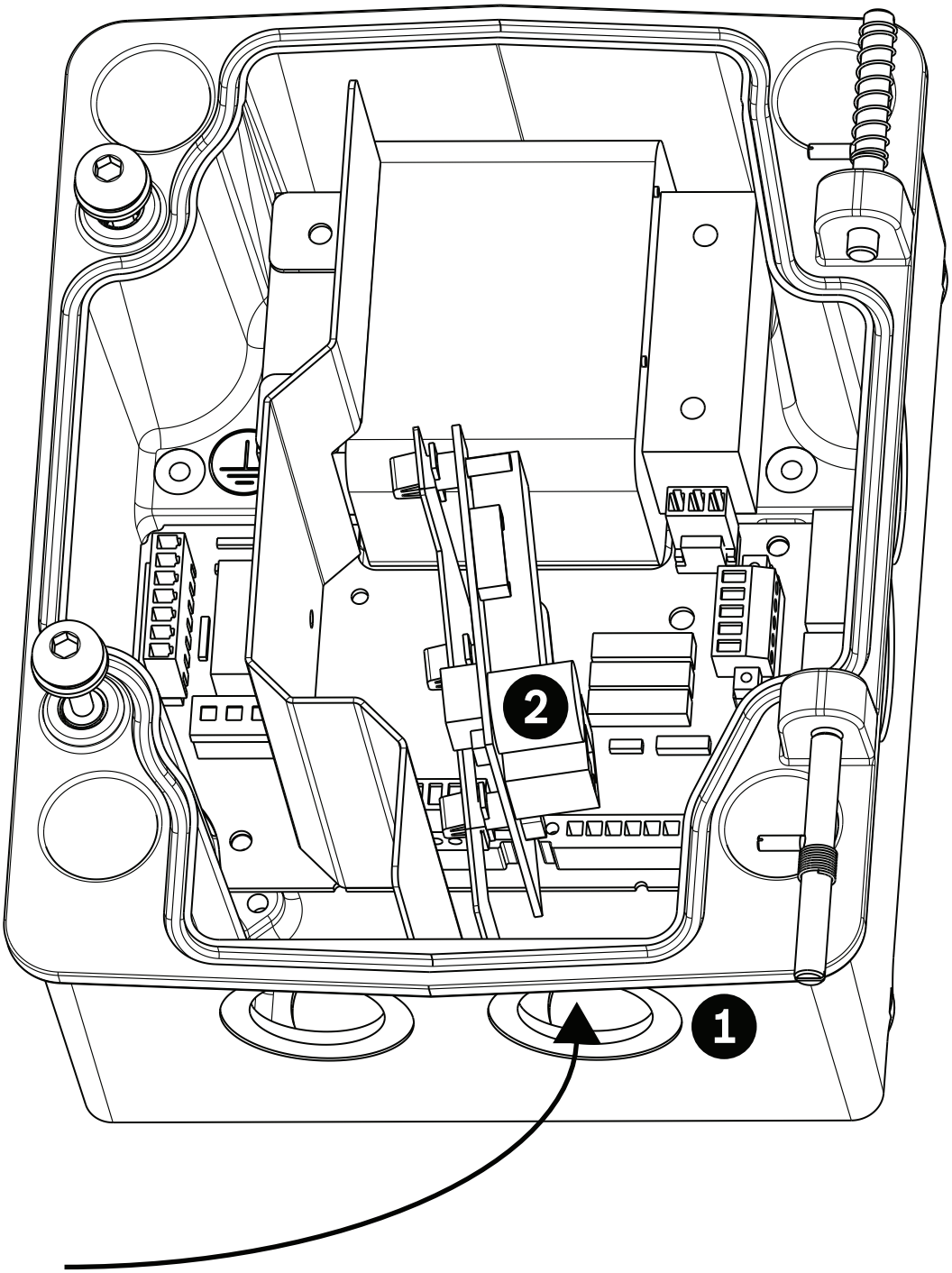

Figure 4.5: Route cable into power supply box

11. Plug the fiber optic cable (LC or SC connector) into the SFP module inside the power supply unit.
12. Close and secure the power supply box.
13. Restore the power to the power supply box.

5 Install for a MIC analog camera

To install the Fiber Optic Media Converter Module (VG4-SFPSCKT) inside a MIC IP Power Supply (to provide fiber optic connections for a MIC550, MIC550IR, or MIC612 camera), complete the following steps.

1. Connect the RJ45 cable to the fiber optic module.

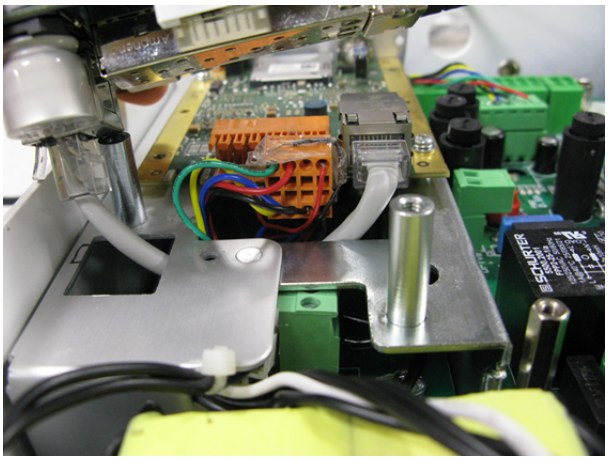

Figure 5.1: RJ45 connection - Fiber optic module in MIC IP PSU

2. Align the anchor holes on the fiber optic module to the standoff bosses on the base plate, and then press the module onto the standoff pins until secure.
3. Install the two mounting screws in the fiber optic module.
4. Connect the fiber cable.

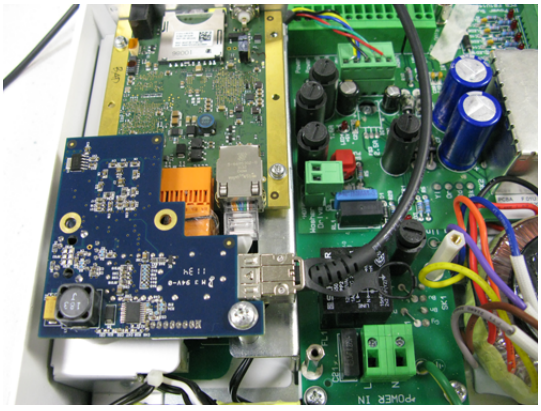

Figure 5.2: Fiber optic module installed in MIC IP PSU

5. Continue installation of the PSU as necessary, and then close and secure the power supply enclosure.

6 Install for an EXTEGRA IP 9000 FX camera

To install the Fiber Optic Media Converter Module (VG4-SFPSCKT) inside an EXTEGRA IP 9000 FX camera, complete the following steps.

1. Remove the three (3) screws that hold the RJ45 coupler assembly in place inside the EXTEGRA camera. Remove the RJ45 coupler assembly.

Note: For details about remove the camera sled from the housing, refer to the instructions in the camera Installation Manual.

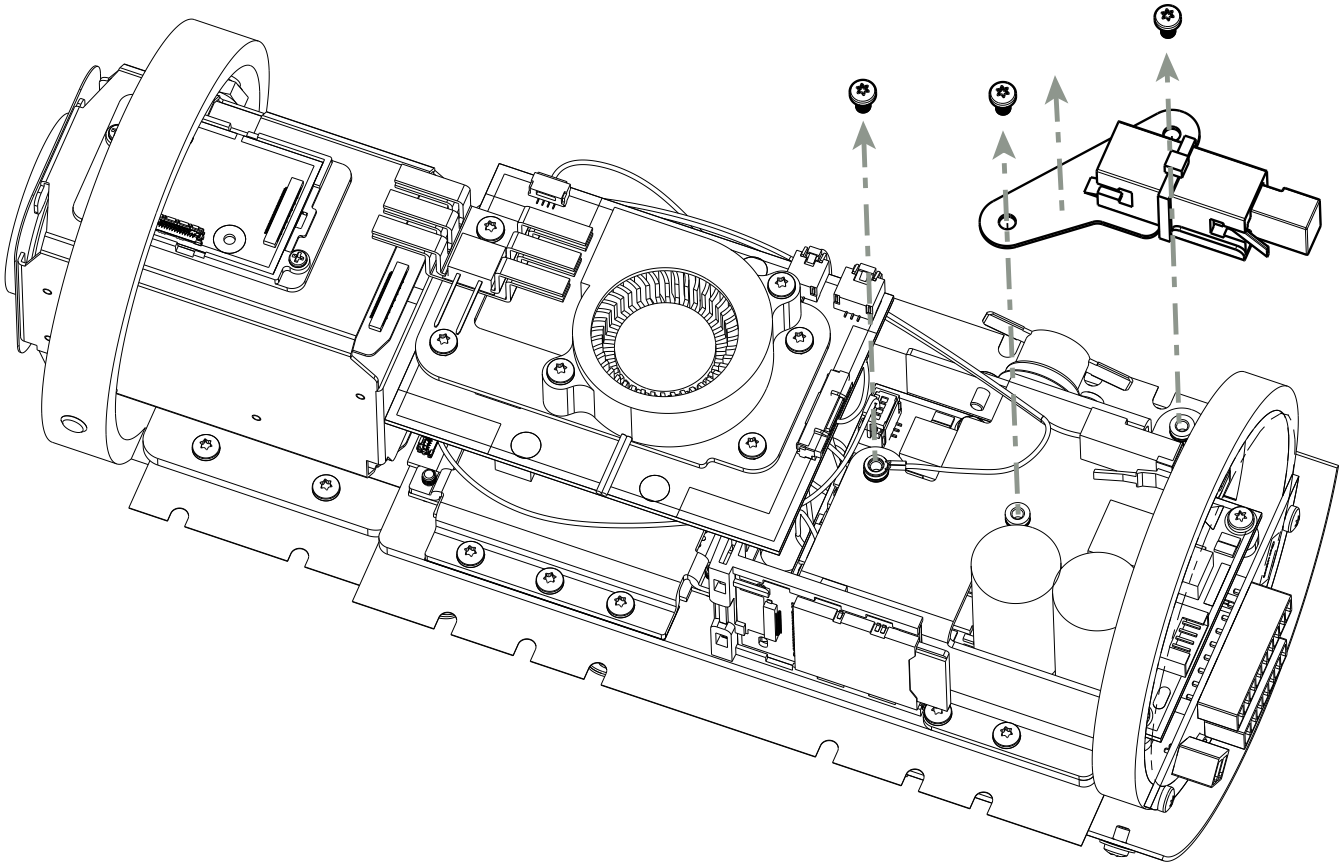

1. Push down the wires (item 1 in the following figure) to prevent the fiber optic board from crimping the wires.

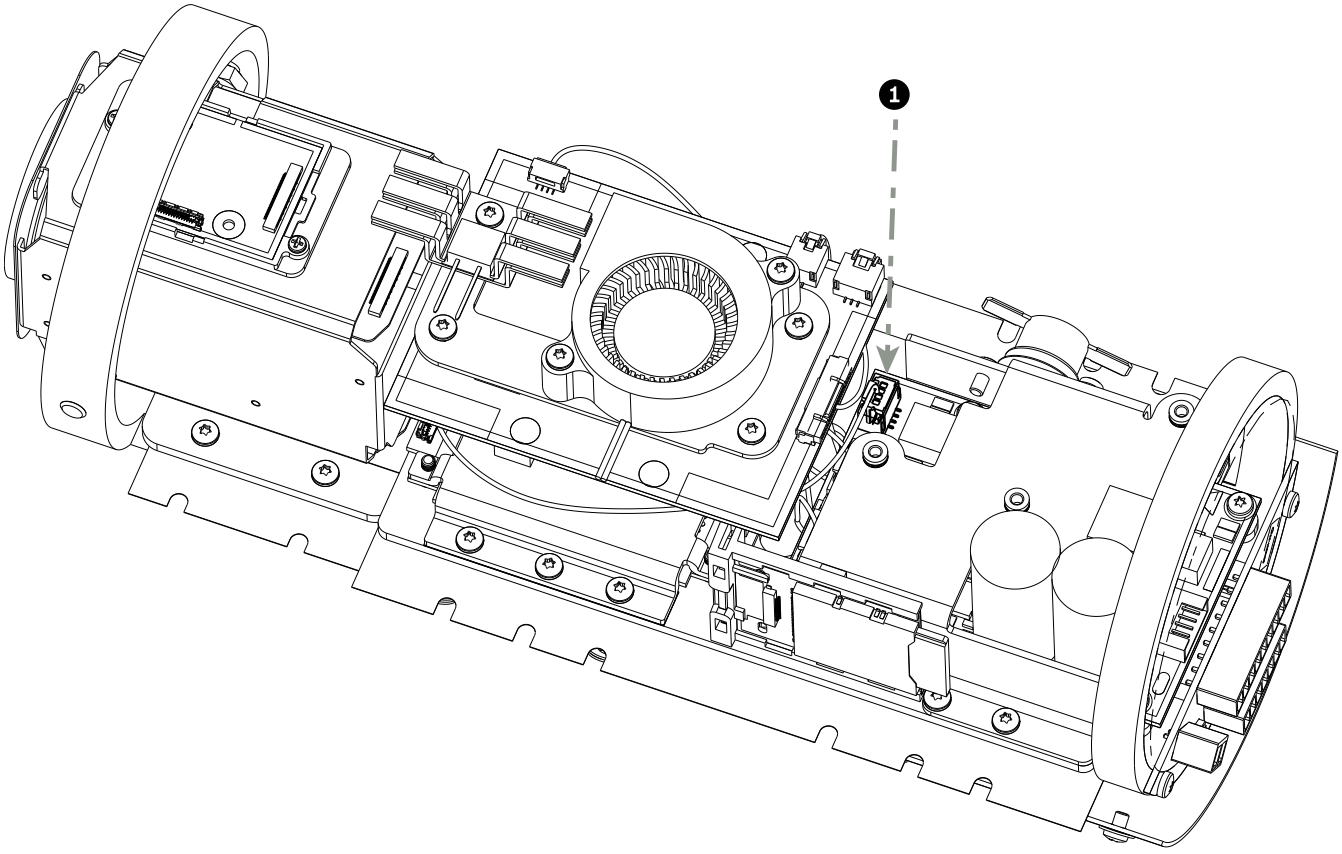

2. Align the screw holes on the fiber optic module to the screw holes from which you removed the screws for the RJ45 coupler assembly.
3. Press the module down until it is secure.
4. Replace the screws.

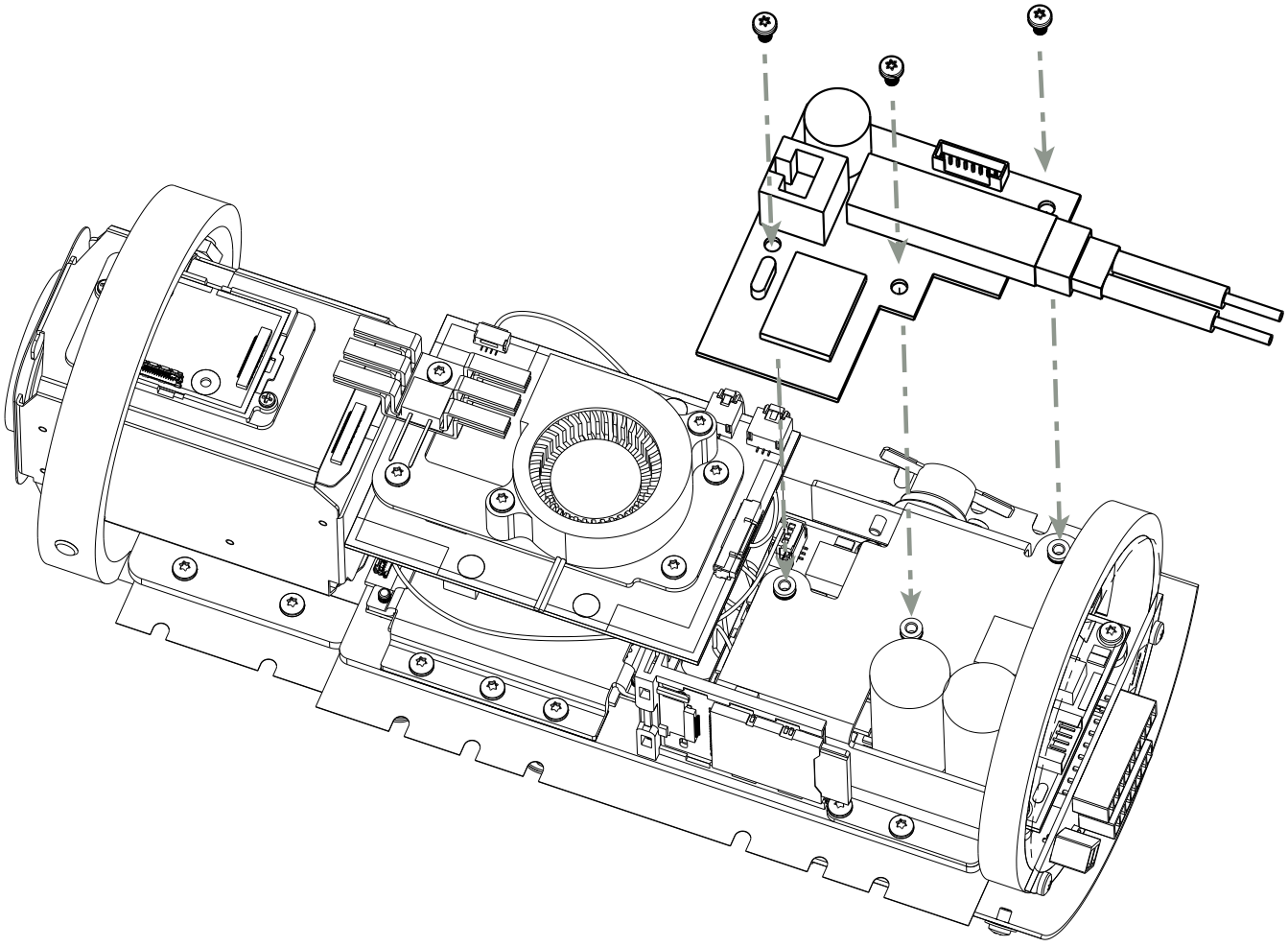

5. Attach the supplied power harness (black) to its connector on the fiber optic module.

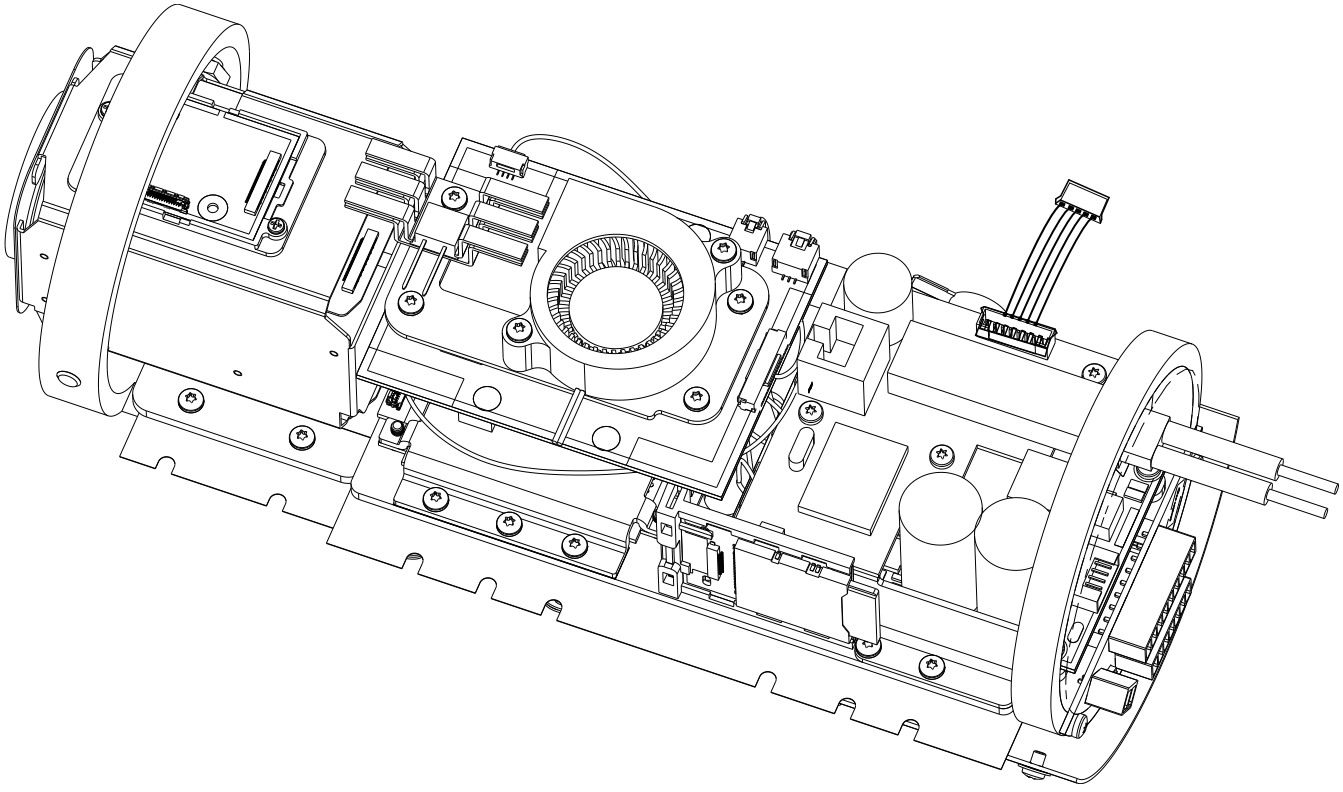

6. Insert the RJ45 plug.

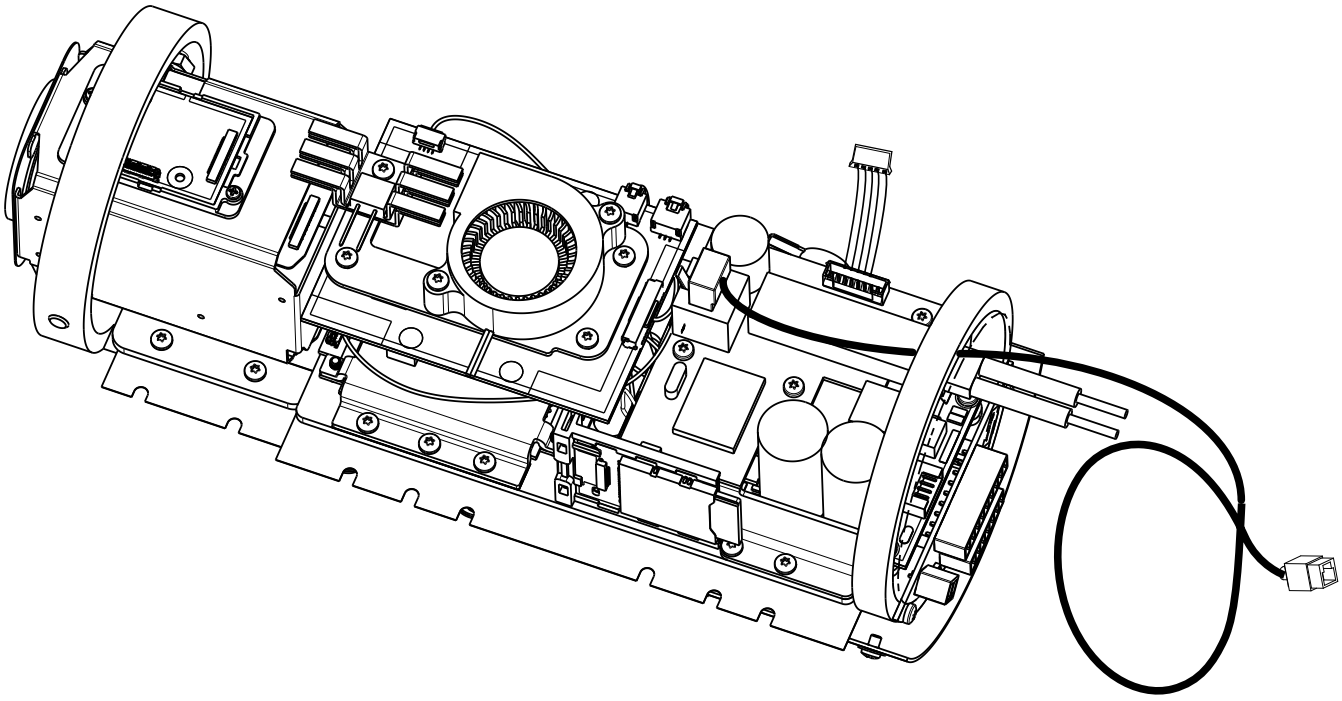

7. Close the camera as described in the camera Installation Manual.

7 Troubleshooting

Issue	Symptom	Resolution
No data present	No Power	Check power to VG4-SFPSCKT: – If Green LED is present, then Check power to CNFE2MC: – If Power LED is Green, then check data link
	Invalid Fiber Link	Check fiber connection to VG4-SFPSCKT: – If Red LED is present, then the fiber link is missing. If the LED is Flashing Red, then Check the fiber connection to the CNFE2MC: – If the Link/Act LED is not lit, then the fiber link is missing.
No Video present	RJ-45 Connection	Check the PWR/Link on the VG4-SFPSCKT: – If the LED is slowly Flashing Red, then Check all video connections from the VG4 AutoDome. – If the LED is rapidly Flashing Red, then Check the RJ-45 connector on the VG4-SFPSCKT: – If the right LED (Green) is not lit, then no data is present at this RJ-45 connection. – If no LED lit on the RJ-45 connector, then there is a fault with this connector, the RJ-45 cable, or the cable is not connected to the CNFE2MC. Check the RJ-45 connector on the CNFE2MC: – If the right LED (Green) is not lit, then no data is present at this RJ-45 connection. – If no LED lit on the RJ-45 connector, then there is a fault with this connector, the RJ-45 cable, or the cable is not connected to the VG4-SFPSCKT.

Bosch Sicherheitssysteme GmbH
Robert-Bosch-Ring 5
85630 Grasbrunn
Germany
www.boschsecurity.com
© Bosch Sicherheitssysteme GmbH, 2017

Bosch Security Systems, Inc
1706 Hempstead Road
Lancaster, PA, 17601
USA