Model RTA-150
Installation Instructions

Hustler 1/4 wave reflector assembly Adds 3 dB gain

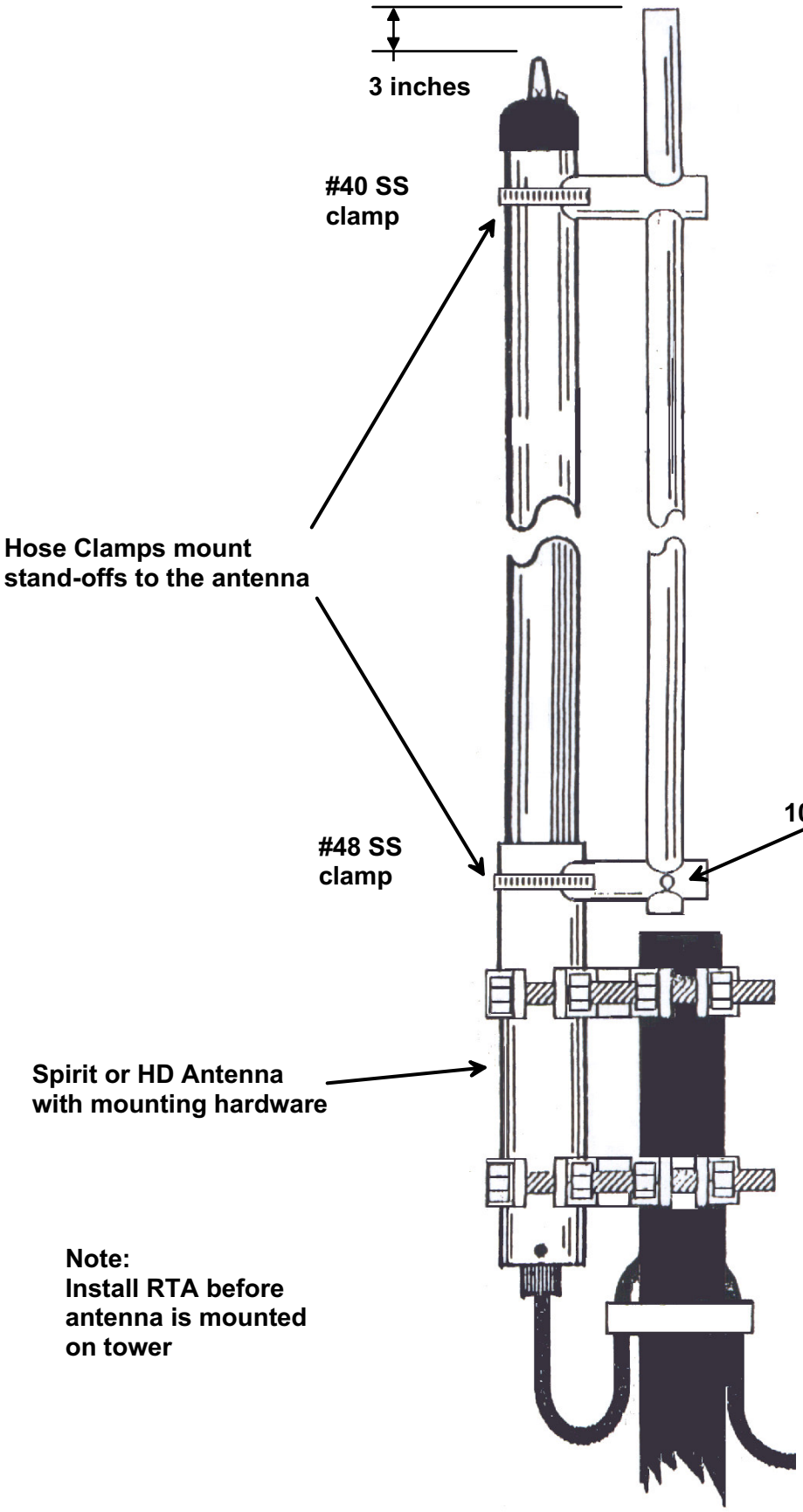

Parts List:

1) 12' aluminum tube
1) SS hose clamp #40
1) SS hose clamp #48
1) 1/4 x 20 SS bolt & lockwasher

Note:
Install RTA before antenna is mounted on tower