Honeywell

AlarmNet®

IGSMV / IGSMVCN

Internet Communication Module

Installation and Setup Guide



Requires Compass Version 1.5.8.54A (or higher) for IP/GSM Downloading

800-07801V1 2/11 Rev. A

Table of Contents

SECTION 1: General Information 1-1

System Overview 1-1
Introduction 1-1
General Information 1-1
System Features 1-2
About AlarmNet-i Internet Application 1-2
Encryption 1-2
Remote Services 1-2
Modes of Operation 1-3
ECP Mode 1-3
Zone Trigger Mode 1-3
4204 Mode and Two-4204 Mode 1-3
Module Supervision Features 1-4
Antenna 1-4
Specifications 1-4
Mechanical 1-4
Electrical 1-4
RF 1-5
Ethernet 1-5
Environmental 1-5
Compatibility 1-5
Compliance 1-6

SECTION 2: Mounting and Wiring 2-1

Determine the Signal Strength and Select a Location 2-1
Mounting the IGSMV 2-2
Standard Mounting Procedure (rear tamper switch is NOT used) 2-2
Mounting Procedure (rear tamper switch is used) 2-3
Wiring the IGSMV 2-4
Connecting and Routing the Audio Cable 2-4
Wiring for ECP, 4204 and Two-4204 Modes 2-5
Wiring for Zone Trigger Mode 2-6
Wiring for Module Fault Relay 2-7
Ethernet Connections 2-7
Power Connections and Options 2-8
Powering the Communication Module 2-8
Backup Battery Connection 2-9
Initial Power-Up Sequence 2-9

SECTION 3: Programming the IGSMV 3-1

General Information 3-1
Using the AlarmNet Direct Website 3-1
Using a 7720P Programming Tool 3-1
Using the Control Panel Programming Mode 3-2
Programming Conventions 3-3
ECP Mode Programming 3-3

ECP Status Codes 3-9
Alternative Modes (Zone Trigger, 4204 and Two-4204) 3-10
Zone Trigger Mode 3-10
4204 Emulation Mode 3-10
4204 Emulation Mode Options 3-10
Alternative Mode Programming 3-11
Exiting Programming Mode 3-22
Setting Factory Defaults 3-22
SECTION 4: Registration 4-1
Registering the IGSMV 4-1
Register through the AlarmNet Direct Website 4-1
Register using the Tamper Switch 4-2
Register using the Programming Tool 4-2
Replacing an existing module using the programming tool 4-3
Register by Phone 4-3
SECTION 5: Programmer Keyboard Commands 5-1
Programmer Keyboard Commands 5-1
Module Identification Displays 5-1
GSM Status Displays 5-2
System Status Displays 5-3
SECTION 6: Network Diagnostics 6-1
Running Network Diagnostics on the IGSMV 6-1
Possible Errors Running Network Diagnostics 6-2
Appendices A-1
Appendix A : Summary of LED Operation A-1
Appendix B : Central Station Messages B-1
Appendix C : IP Downloading C-1
Appendix D : Glossary D-1
Summary of Connections Diagram……..……...Inside Back Cover

General Information

System Overview

Introduction

Congratulations on your purchase of Honeywell's IGSMV/IGSMVCN combination Internet/GSM communication module (henceforth referred to as IGSMV, or IGSMVCN in Canada). It represents the latest and most innovative communication technology for the security industry and uses the most sophisticated encryption to ensure the highest level of security for your customer.



The IGSMV module requires an AlarmNet–i account. For new installations, please obtain the account information from the central station prior to programming this module. For replacement installations, the AlarmNet-i account is created automatically when the module is registered.

In addition to alarm reporting, the IGSMV provides two-way voice communications with the central station (when used with Honeywell's AVS Audio Verification System) and provides upload/downloading capability of Honeywell's control panel data over the Internet (via the AlarmNet-G network), using GSM (Global System for Mobile) technology.

UL / ULC Two-way voice has not been evaluated by UL/ULC.

NOTE: Two-way voice is not compatible with Honeywell Commercial Control Panels (such as the VISTA-128/250 series).

General Information

Honeywell's IGSMV Internet communication module communicates via the Internet (when service is available) and switches to GSM service when the Internet is not available. When both services are unavailable, the IGSMV module provides a third way to communicate by sending a transmission via SMS (Short Message Service) also known as a text message.

ULC SMS has not been evaluated for ULC central station communication.

In normal operation (with Internet connectivity), the IGSMV communicates from your customer's network connection to the Honeywell Network Operations Center, (NOC) via the AlarmNet-i network. The NOC receives data and routes the information to the Central Station of your choice, based on the account number you assign to the module. Note that your Central Station needs to give you the account number. The same account number is used for both Internet and GSM transmissions. If your current Central Station is capable of receiving signals from the Honeywell NOC, they are capable of receiving signals from the IGSMV module.

If, for some reason, Internet connectivity is not available, (for example, your customer's ISP is off line or disconnected), the IGSMV will transmit signals via the AlarmNet-G (GSM) cellular network, which uses the GPRS (General Packet Radio Service) to complete these transmissions. These transmissions are sent to the Honeywell NOC and then forwarded to your Central Station exactly the same way as if they were received via the Internet.

If the Internet AND GPRS (part of the GSM cellular network) are both unavailable, the IGSMV will attempt to send the transmission via SMS (Short Message Service), also known as a text message. If all three methods fail, the message will not be sent via this device.

ULC The IGSMVs' Internet channel has been evaluated for active communication and Level A3 channel security for burglary. The GSM Cellular channel is employed for supplemental use; it may be used in conjunction with a listed DACT to provide passive communication when using P2 channel security for burglary (when Internet connection is not available).

System Features

Basic features of the IGSMV include:

- Remote Services allow the end user to access their security system from their computer via a website. Availability of this service is controlled by the dealer via the web-based programming tool on the AlarmNet Direct website. Once enabled, remote access can be programmed via web or 7720P programming tool.
- Supports dynamic or static IP addressing, and installs behind firewalls without compromising network security.
- Quick connection to compatible Honeywell series control panels
- Simple programming using a 7720P programming tool
- Reports fire, burg, and status messages via the Internet
- Reports messages via AlarmNet-G as backup to Internet reporting
- Allows uploading and downloading of control panel data over the Internet.
- Supports remote control of alarm systems via Remote Services feature.
- Two-way voice capability

About AlarmNet-i Internet Application

AlarmNet-i is a fully encrypted, secure method of delivering alarm messages from a protected premise to an AlarmNet equipped central station. An Internet Communicator Module transmits status, supervisory, and alarm messages to the AlarmNet Control Center using a broadband Internet connection.

The AlarmNet Control Center identifies, validates, and forwards the messages to the appropriate AlarmNet central station. AlarmNet-i has an unlimited account capacity.

Encryption

The IGSMV supports private key encryption. Private Key encryption means that both the sender and the receiver know the KEY used to encrypt the data. Each device produced by Honeywell is loaded with a globally unique identifier called a MAC number, and a large random number or KEY. This KEY and MAC number are also stored in the AlarmNet servers. When a device contacts AlarmNet, it sends the MAC number in the clear followed by the message that is encrypted using the KEY data. The server looks up its copy of the KEY based on the MAC number and uses that KEY to decrypt the message.

The IGSMV uses 256 bit AES (Rijndael) encryption (which is required for certain government installations). The AlarmNet-i AES Encryption Software Module Version 1.0 contained in the Honeywell products has NIST approval. Listings for this approval can be found at http://csrc.nist.gov/cryptval/aes/aesval.html Certification number 127.

UL The IP and GSM signaling paths are suitable for encrypted line security when programmed for 1 minute IP/GSM Fault Times. The system configurations are not suitable as a Dual Line Signal transmission system.

Remote Services

Honeywell now offers a new series of web based services that provides consumers with the ability to communicate with their security system remotely in a number of ways. These new web services will allow users to:

- Access their security system from a computer via a website (Remote Access feature)
- Receive email and text message notifications of system events (Multi-Mode feature)
- Perform system functions and receive confirmations using text messages (SMS feature)

Dealers will initially enroll their customers for web services during account programming through the AlarmNet Direct website. The features that can be enabled include Remote Access and Multi-Mode. Once enabled, the specific programming fields associated with these features can be programmed into the communications device either remotely using the AlarmNet Direct website or locally using the 7720P local keypad programming tool.

UL Remote Access and Multi-Mode have not been evaluated by UL.

Modes of Operation

The IGSMV provides four modes of operation so it can be used with various types of control panels, as summarized below.

ULC Only ECP Mode has been approved for ULC installations.

UL Only ECP Mode and Zone Trigger Mode have been evaluated.

ECP Mode

- This mode is for use with Honeywell controls that support LRR-ECP communication
- The module connects to the control's keypad terminals and provides 2-way communication with the control using ECP messaging
- The control treats the module as a Long Range Radio (LRR) device, so program the control accordingly, including setting the module's proper LRR device address
- Reports are sent in Contact ID format
- The module also supports two hardwire zone trigger inputs (zones 6 and 7)

UL
- Opening and Closing ring back is fully supported.
- For the IGSMV, only the V+ inverted, V– non-inverted, and EOL options have been evaluated.

Zone Trigger Mode

- This mode is for use with controls that do not support LRR-ECP communication nor 4204 Relay Modules
- The module provides six input zones
- Each zone can be configured for +V, -V, or EOLR triggering

  UL – For the IGSMV, only the V+ inverted, V– non-inverted, and EOL options have been evaluated.
- Each zone can be programmed for inverted operation, delayed reporting, and restoral reporting
- Zone 1 input can distinguish between pulsed and steady signals and report fire or burglary alarms respectively
- Zone 1 can also be programmed to report LYNX panic (if used with LYNX control)

  UL – This feature has not been evaluated by UL.
- Reports are sent in ADEMCO High-Speed format

UL Opening and Closing ring back is supported by the control panel's digital dialer.

4204 Mode and Two-4204 Mode

- This mode is for use with Honeywell controls that do not support LRR-ECP communication, but that do support 4204 Relay Modules
- The module connects to the control's keypad terminals

- The control treats the module as 4204 Relay Module(s), so program the control accordingly, including setting the module's proper 4204 device address
- 4204 mode provides up to four zone inputs, plus two optional trigger zones, depending on options programmed
- Two-4204 mode provides up to eight zone inputs, depending on options programmed
- Each 4204 zone can be programmed for delayed reporting and restoral reporting
- Reports are sent in ADEMCO High-Speed format

UL 4204 Mode and Two-4204 Mode has not been evaluated by UL.

Module Supervision Features

The IGSMV provides the following types of supervision and module fault detection:

- Network communication failure: In the event the AlarmNet network does not hear a supervisory message from the module within a specified time, AlarmNet notifies the central station of a communication failure.
- Communication path failure: In the event the module detects a communication path failure, the control panel can be notified of a trouble condition with the module after a specified time has elapsed ("GSM Flt Time" option, 00-99 minutes).
- Fault output: Terminal 11 can serve as a fail-safe trigger for module fault conditions.
- If used, the fault relay will trip when the following conditions occur: tamper*, power loss*, low battery*, battery charger fault*, loss of network connectivity*, the device is not registered and the device is remotely disabled by AlarmNet.
- ***** Alarm reporting for the noted condition must be enabled for it to trigger the fault relay.
- Primary power loss and low battery conditions ("Pwr Loss Rpt," "Low Bat Rpt" options).
- Cover tamper condition ("Tamper Rpt" option).

Antenna

The IGSMV comes equipped with an internal antenna. This feature provides additional security to the installation by making the device tamper resistant.

UL/ULC External antenna has not been evaluated by UL.



AMPS antennas, such as the 7825-OC antenna, cannot be used with this product.

Specifications

Mechanical

Dimensions: 8.4" x 8.0" x 1.5"
Weight: 2.4 lbs., with battery

Electrical

Input Power: 16.5VAC, 40VA transformer, Honeywell model No. 1361 (included)
Current Drain: 65mA average standby, 500mA peak transmit

Or

Input Power for ULC Installations: 12VDC from the control panel
Current Drain: 80mA average standby, 650mA peak transmit

Backup Battery: 6V, 3.1AH, Honeywell part number K14139, (included)

Expected Battery Life: 5 Years (approx.)

Fault Relay Output: Open collector, 12VDC, .25W max.

Positive Trigger Level: 6V or greater = positive trigger. (4V or less = restore.)
Negative Trigger Level: 4V or less = negative trigger. (6V or greater = restore.)

RF

Transceiver Type: Quad-Band GSM/GPRS Class 10

Modulation: GMSK

Antenna: Internal GSM quad-band antenna 1.3 dBi gain

Band	Transmission Frequency (MHz)	Transmit Power (dBm)	Receive Frequency (MHz)	Receive Sensitivity (dBm)	Number of Channels	Channel Spacing (MHz)	Duplex Separation (kHz)
GSM 850	824-849	33	869-894	-107	124	200	45
GSM 900	890-915	33	935-960	-107	124	200	45
GSM 1800	1710-1785	30	1805-1880	-106	374	200	95
GSM 1900	1850-1910	30	1930-1990	-105.5	299	200	80

Ethernet

Network Standard: IEEE 802.3u compliant
Data Rate: 10Base-T / 100Base-T with auto detect
Ethernet Cable: Cat. 5 (min), MDI/MDI-X auto crossover

Environmental

Operating temperature: -20ºC to +55ºC, for UL/ULC installations 0ºC to +49ºC

Storage temperature: -40º to +70ºC

Humidity: 0 to 95% relative humidity, non-condensing
for UL installations 0% to 85%; for ULC installations 0% to 93%

Altitude: to 10,000 ft. operating, to 40,000 ft. storage

Compatibility

For a list of control panels that are compatible with various features of this device, go to:

http://www.security.honeywell.com/hsc/resources/MyWebTech.

After logging on, select the applicable communication product, and then select "Compatibility Chart" under Essential Docs.

For UL and ULC Fire and Burglary installations, compatible control panels are:

- Vista-32FB
- Vista-128FBP
- Vista-250FBP
- FA1670C
- FA1700C

For UL and ULC Fire and Burglary installations, compatible receivers are:

MX8000 (UL – can be used for secondary reporting in ECP mode and Zone Trigeer mode. Shall be used for opening and closing ring back with the control panel dialer)

7810iR-ENT (UL – must be the primary alarm receiver.)

- Ademco 685

UL	The Automation System must be UL1981 listed. The IGSMV has been evaluated for connection to police station receivers.
ULC	The IGSMVCN has only been evaluated for communication with listed Model 7810iR-ENT internet receiver and Model MX8000 central station receiver.

Compliance

This device complies with the following ULC Installation Codes and Standards:

1. The Canadian Electrical Code, Part I, Safety Standard for Electrical Installations, CSA C22.1.
2. National Building Code (NBC).
3. Standard for Installation and Services for Fire Signal Receiving Centers and Systems, CAN/ULC-S561-03.
4. Standard for Installation of Fire Alarm Systems, CAN/ULC-S524-06.
5. Standard for Installation and Classification of Burglar Alarm Systems for Financial and Commercial Premises, Safes and Vaults, CAN/ULC-S302-M91.

Mounting and Wiring

Determine the Signal Strength and Select a Location

The IGSMV must be mounted indoors within the protected premises. When choosing a suitable mounting location, understand that signal strength is very important for proper operation. For most installations using the supplied antenna, mounting the unit as high as practical, and avoiding large metal components provides adequate signal strength for proper operation.

You will use the communications module to determine signal strength in order to find a suitable mounting location.

Note: If the SIM is already activated, the RSSI signal strength indicators will indicate signal strength.
If the SIM has not been activated, the firmware in the communications module enables it to communicate with the cellular network towers (without the SIM being activated) so that signal strength measurements can be determined. In this case, you can display the signal strength by simultaneously pressing the MODE and TAMPER switches.

RF Exposure

Warning – The antenna(s) used for this transmitter must be installed to provide a separation distance of at least 20 cm from all persons and must not be collocated or operating in conjunction with any other antenna or transmitter.

Note: The IGSMV must be installed in accordance with the National Fire Alarm Code, ANSI/NFPA 72.

Unshielded, 22 AWG cable is recommended for IGSMV power/data wires.

1. Unpack the IGSMV and detach the case back by pushing up into the two tabs located at the bottom of the IGSMV with the blade of a screwdriver while pulling the case back and case front apart.
2. Temporarily connect the IGSMV to the AC transformer, supplied.
3. Choose the installation site with the **best signal strength** by observing the signal strength (RSSI) bar graph (refer to *Appendix A for* information about signal strength and status indications). Signal strength should be within 3-5 bars. The best signal strength is usually found at the highest point in the building, near a window. Unplug the transformer.

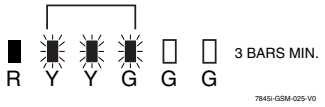

4. Mark the location for the IGSMV.

Mounting the IGSMV

The communications module can be mounted in two ways depending on the installation requirements.

ULC NOTES:

For Commercial Fire installations, the module must be mounted to a single or double gang box.

1. Locate the Drilling Template (provided) and align with case back. Drill at the appropriate locations for either single or double gang box.
2. Locate the gang box into the mounting surface, align case back over mounting surface and install using the screws provided. Pass wires/cables through the opening in the gang box and then through the opening in the case back.
3. When all wiring is completed, attach the case front to the case back. Attach the top first then press the bottom section inward until it snaps into place. Secure cover using supplied screw.
4. For Commercial Burglary installations, you must install the rear tamper switch.

UL The cover must be secured with the supplied screw.

Standard Mounting Procedure (rear tamper switch is NOT used)

1. Locate the case back over selected mounting position such that the opening in the case back is aligned with the wire/cable opening on the mounting surface.
2. Pass the wires/cable through the opening in the case back, or route through the removable knockouts located on the back cover.
3. Secure the case back to the mounting surface using four screws (supplied).
4. When all wiring is completed, attach the case front. Position the top first, then press the bottom section until it snaps in place. Secure bottom using the supplied cover screw. (This is required for UL installations.)

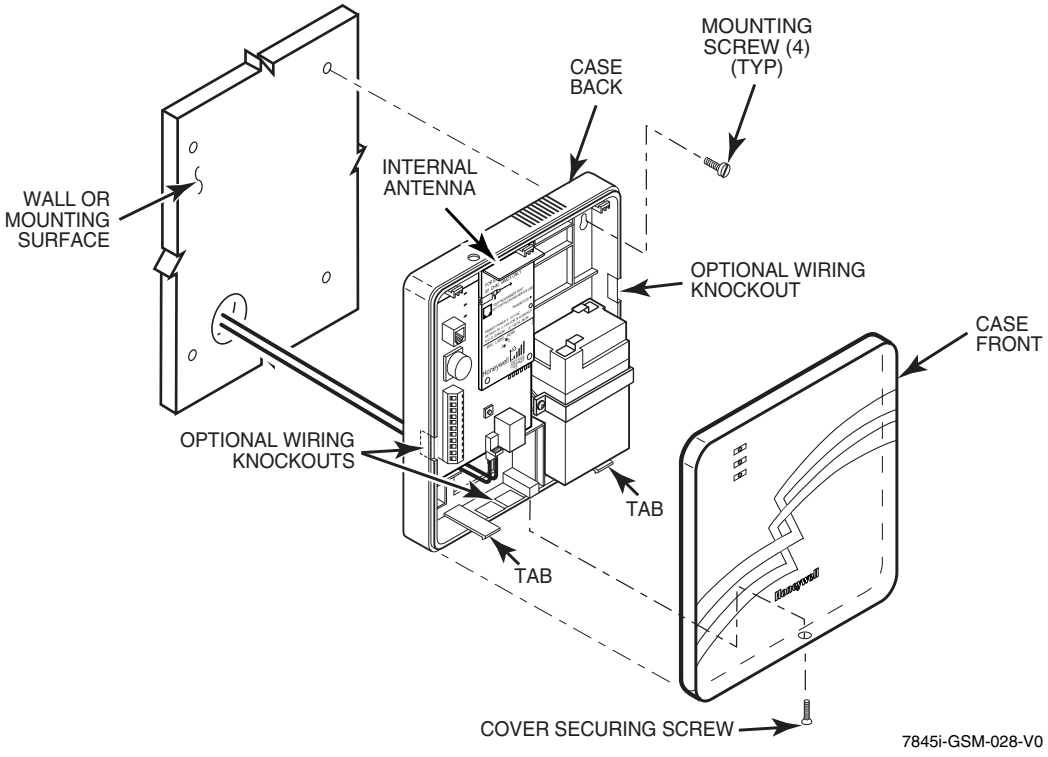

Figure 2-1. Standard Mounting

Mounting Procedure (rear tamper switch is used, IGSMVCN model only)

For installations where the use of a rear tamper switch is desired. The procedure requires the removal of the printed circuit boards and installation of the tamper screw.

1. Remove the two mounting screws, and standoff from the daughter card, as shown in **Step A** below.
2. Remove the daughter card by pivoting upward, as shown in **Step B** below.
3. Remove the lower printed circuit board by pushing down on the lower tabs and pivoting the board upward, as shown in **Step C** below.

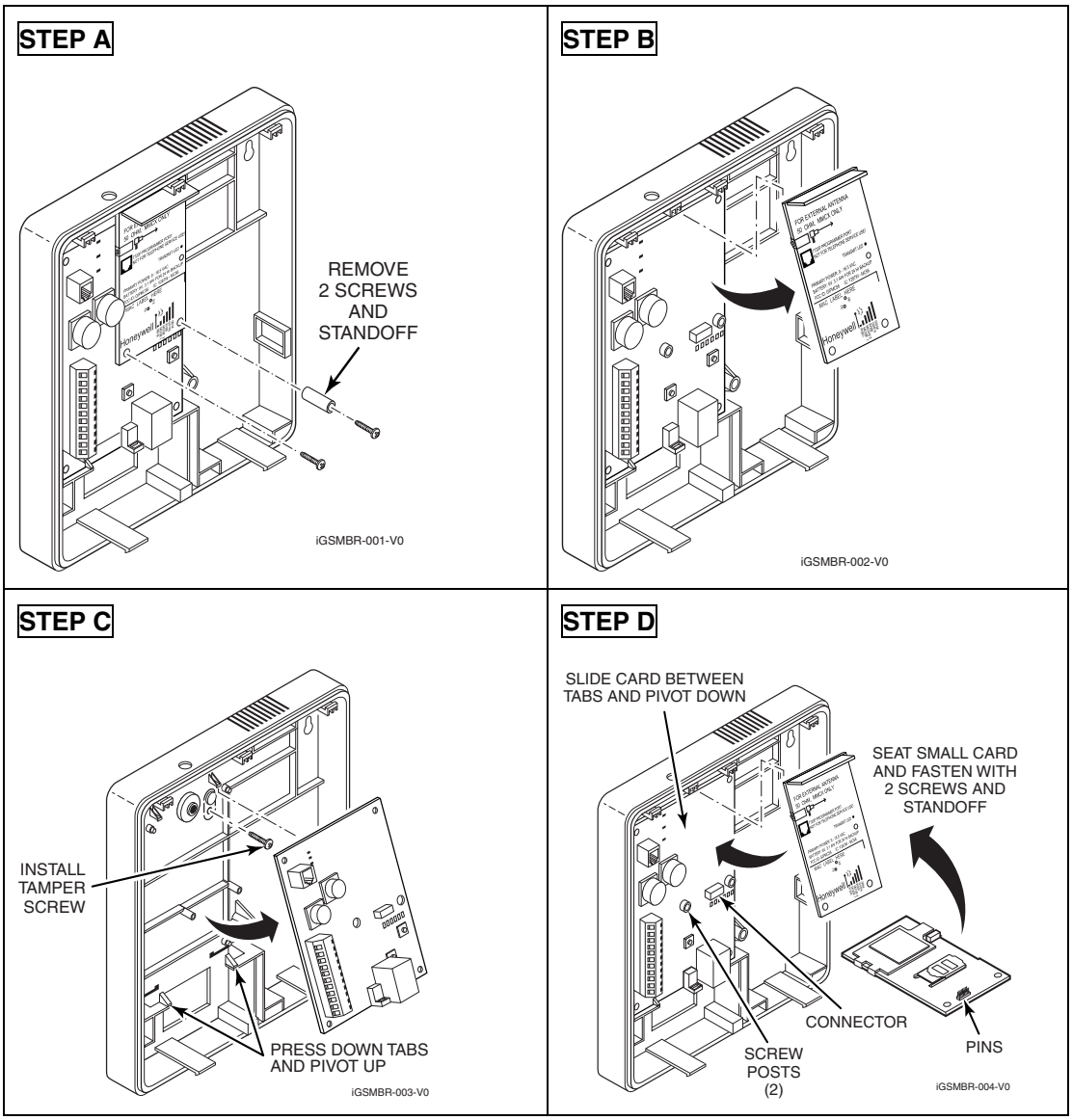

4. Locate the case back over selected mounting position such that the opening in the case back is aligned with the wire/cable opening on the mounting surface.
5. Pass the wires/cable through the opening in the case back, or route through the removable knockouts located on the back cover.
6. Secure the case back to the mounting surface using four screws (supplied).
7. Install the tamper screw (provided), as shown in **Step C** above.

8. Replace lower printed circuit board and then daughter card, as shown in **Step D** above. Be sure to engage receptacle pins by pushing in before securing the daughter card with mounting screws.

When all wiring is completed, attach the case front. Position the top first, then press the bottom section until it snaps in place. Secure bottom using the supplied cover screw. (Refer to Figure 2-1.)

Wiring the IGSMV

UL

- Installation must be in accordance with; the National Electrical Code, UL681 Installation and Classification for Burglary and Hold-Up Alarm Systems, and UL827 for Central-Station Alarm Services.
- IGSMV must be connected to a UL Listed dry contact or voltage trigger outputs of a UL Listed compatible control unit.
- All interconnecting wires between the UL Listed control panel and the IGSMV must be less than 3 feet in length contained in the same room. All interconnecting wiring must be installed in rigid or EMT (where exposed on interior walls) or in flexible metal tubing if run in the walls or ceiling.
- A UL listed control panel must monitor the radio fault output of the IGSMV. Premises openings and closings should be sent via the UL listed control panel.
- Only ECP mode and Zone Trigger mode have been evaluate by UL.

ULC For ULC Commercial Fire and Burglary installations, use ECP wiring in Figure 2-8 only.

Connecting and Routing the Audio Cable

The IGSMV requires an optional audio cable (GSMV-AUDIO) to support two-way voice using the AVS Base Unit. Note the AVS Base Unit is part of Honeywell's AVS Audio Verification System. This system consist of the AVS Base Unit, Remote Station, and the Remote Station PC board. For detailed information, please refer to the AVS Audio Verification System documentation.

Follow the guidelines below for connecting the audio cable.

1. Power down the control panel and AVS Audio Verification System. (When the IGSMV is fully wired up, restore power to the control panel and AVS Audio Verification System.)
2. At the IGSMV, remove two [2] screws and standoff that secure the small PC board, and swing up.

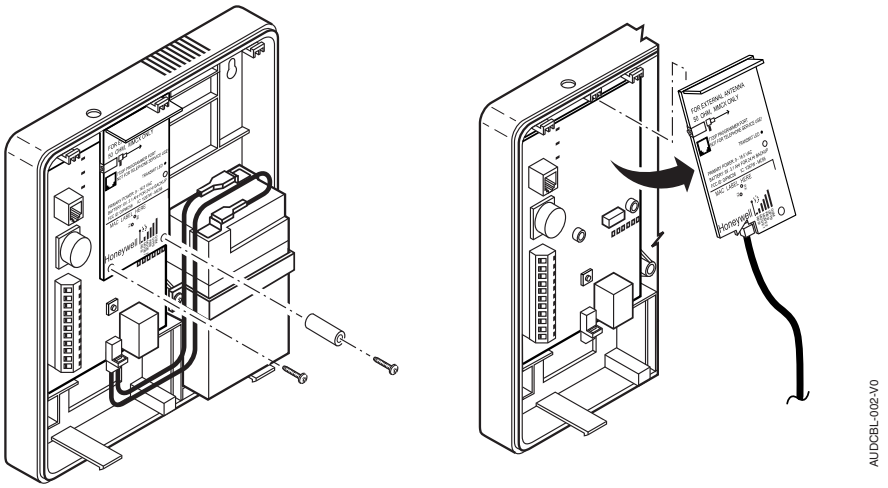

3. Connect one end of the audio cable to the audio connector located on the small PC board.

4. Secure the small PC board and plastic standoff with two [2] screws. Note the standoff mounts on the right side.
5. Route the audio cable to the connector on the AVS Base Unit and connect the cable.

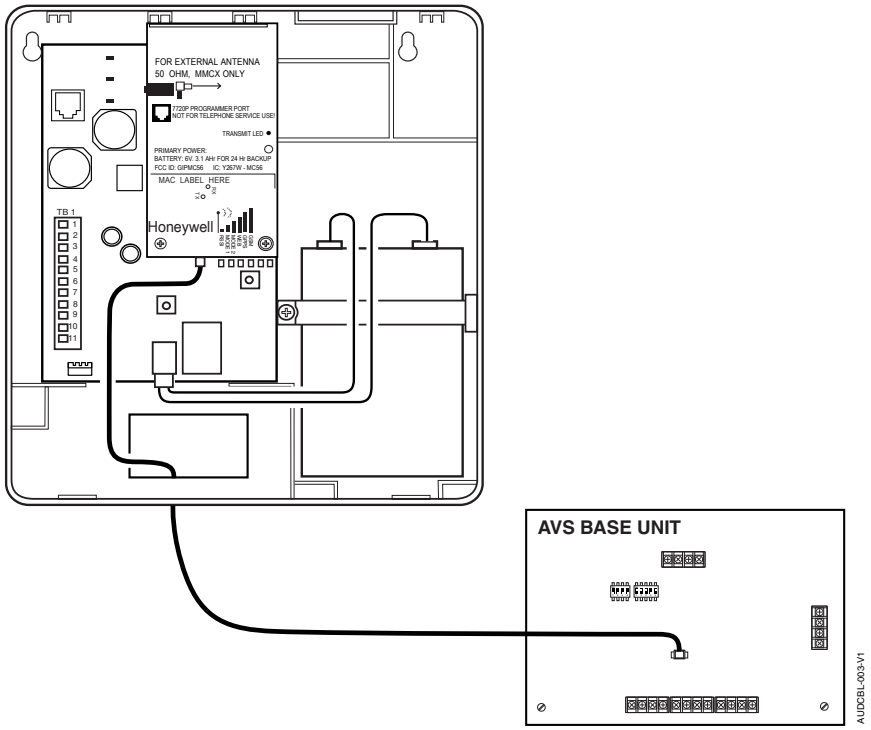

6. Ensure the audio cable ends are secured with tie wraps to reduce strain.

Wiring for ECP, 4204 and Two-4204 Modes

Most Honeywell ADEMCO control panels support LRR-ECP data communication, (e.g., VISTA-10P, VISTA-15P, VISTA-20P, VISTA-128BP and VISTA-128FBP). However, there are some panels that do not. Check the Installation and Setup Guide for the control panel you are using to see if it supports ECP communication.

Connect the IGSMV to a compatible Honeywell VISTA control panel's ECP terminals, in parallel with keypads and other peripheral devices such as RF receiver, VIP module, etc. Wire length/gauge limitations are the same for the module as they are for keypads and other peripheral devices. To wire the module for ECP or 4204 modes, see *Figure 2-2* and make the following connections:

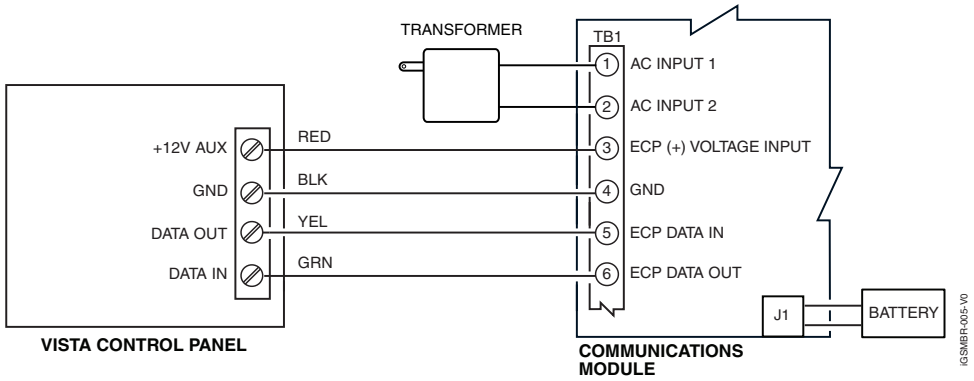

Figure 2-2. Wiring a VISTA for ECP Mode or 4204 Modes

Wiring for Zone Trigger Mode

To trip a zone using a positive trigger, the voltage level must be:

6V or greater = positive trigger. (Levels above +14V may cause damage to the unit.)

4V or less = restore.

To trip a zone using a negative trigger, the voltage level must be:

4V or less = negative trigger.

6V or greater = restore. (Levels above +14V may cause damage to the unit.)

Note: Remember to program the communications module zone for the desired trigger type.

Connect a wire from the triggering source (bell output, voltage trigger, etc.) of the control panel to the zone input of the module, and connect a common ground between the module and control panel. Examples of zone connections follow:

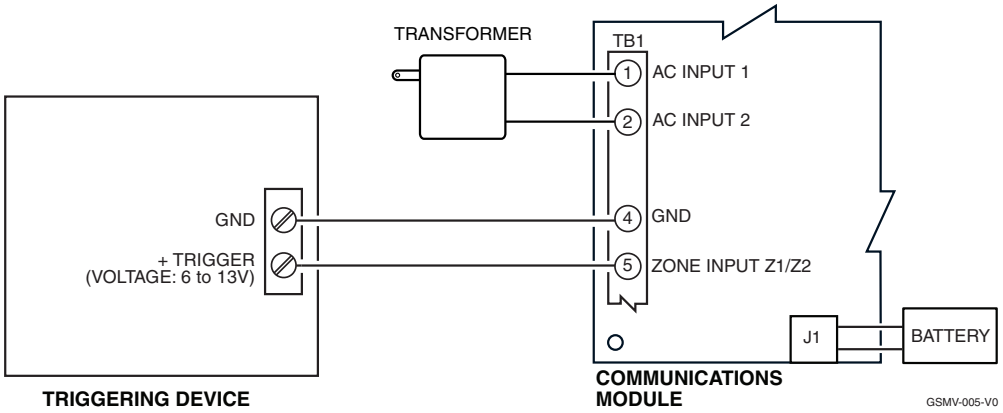

Figure 2-3. Wiring the IGSMV Zone 1 Input for a Positive (+) Trigger

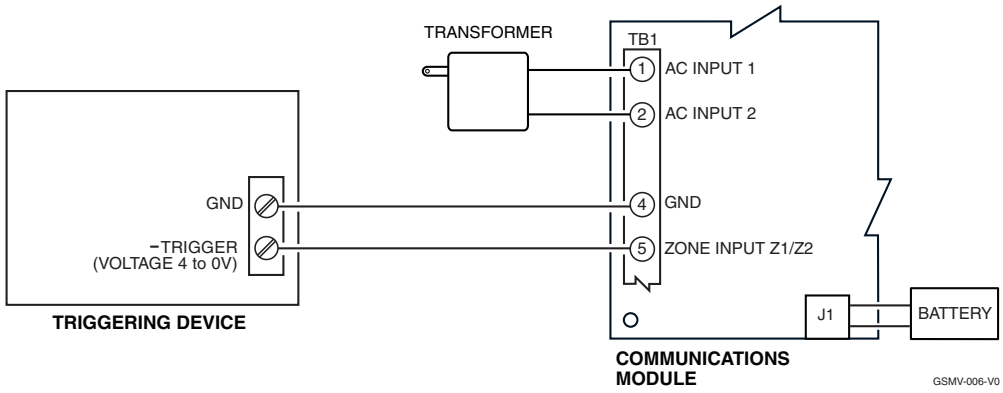

Figure 2-4. Wiring the IGSMV Zone 1 Input for a Ground (-V) Trigger

UL

- Zones should use EOL resistors, and be programmed as V+ Inverted or V– Inverted operation such that a cut line results in an alarm.
- Do not use zones 1 and 2 for UL installations.

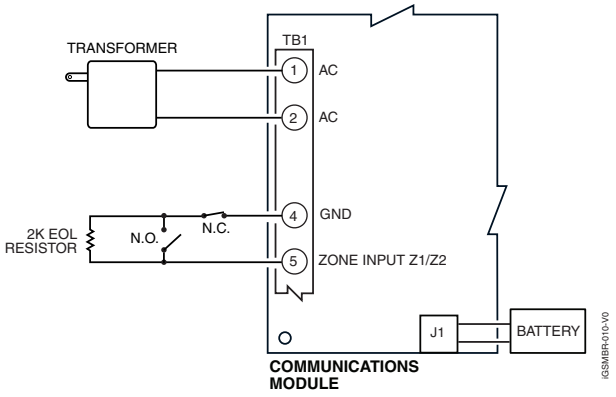

Figure 2-5. Wiring the IGSMV Zone 1 Input for EOL Supervised N.O./N.C. Triggers

Wiring for Module Fault Relay

You may wire and program the module's fault output trigger for fail-safe mode (see the question "FLT REL ON Y/N").

To sense a module fault at the control panel, make connections as shown in *Figure 2-6*, including the proper EOL resistor required by the control..

UL / ULC

For Commercial Burglary, a 24 hour zone (supervisory) must be assigned on the control panel, with the communication module's fault relay wired to that zone.

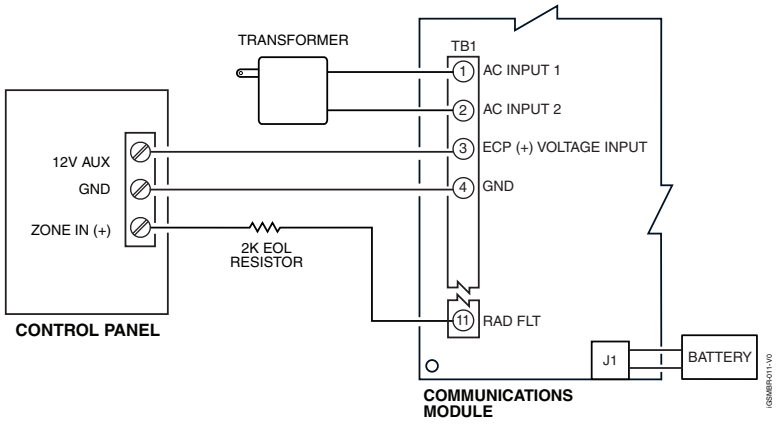

Figure 2-6. Wiring the IGSMV Fault Relay to a Control Panel Zone for Normally Closed Fault

Ethernet Connections

UL

- For UL installations, the Cat. 5 Ethernet connection between the IGSMV and the router cannot exceed 12 feet with both the IGSMV and the router located within the same room.
- Use a Listed cable/DSL router suited for the application.

Connect one end of the Ethernet cable (Category 5) to the IGSMV's RJ45 Ethernet connector and the other end to the cable/DSL router as shown in the figure below.

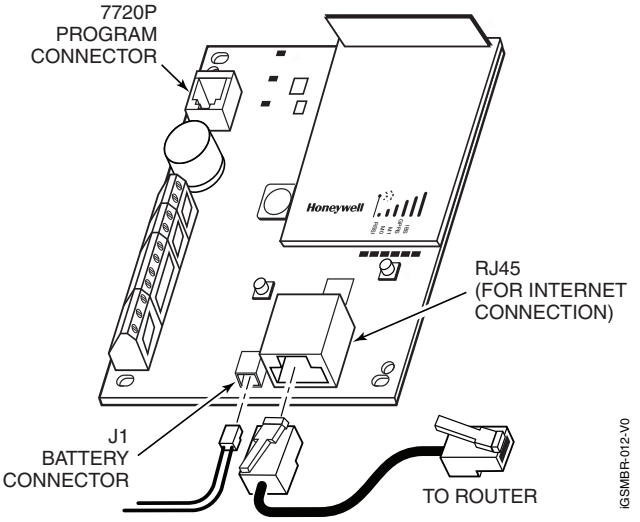

Figure 2-7. Ethernet Connections

Power Connections and Options

Powering the Communication Module

There are three ways to power the communications module (see *Figure 2-8* below):

Standard Installation – The communications module is powered by the supplied AC plug-in transformer.

ULC Commercial Fire and Burglary Compliant Installation – The communications module must be powered by the control panel.

Shared Transformer Installation – In this installation the supplied AC plug-in transformer may be used to power both the communications module and the control panel under the following conditions:

- You must use the Honeywell 1361 Transformer.
- This configuration ONLY applies to the VISTA-10P, VISTA-15P, VISTA-20P control panels when used with the GSMV or IGSMV Communications Module.
- DO NOT use this configuration with any other control panel.
- DO NOT use this configuration if using two-way voice.
- This configuration has not been evaluated by UL.

For all installations the control panel ground (GND) must be connected to TB1-4 GND on the communications module. In addition, if using ECP communication, you must connect the +12VDC AUX voltage output on the control panel (9.6V-13.8V typical) to TB1-3 on the communications module.

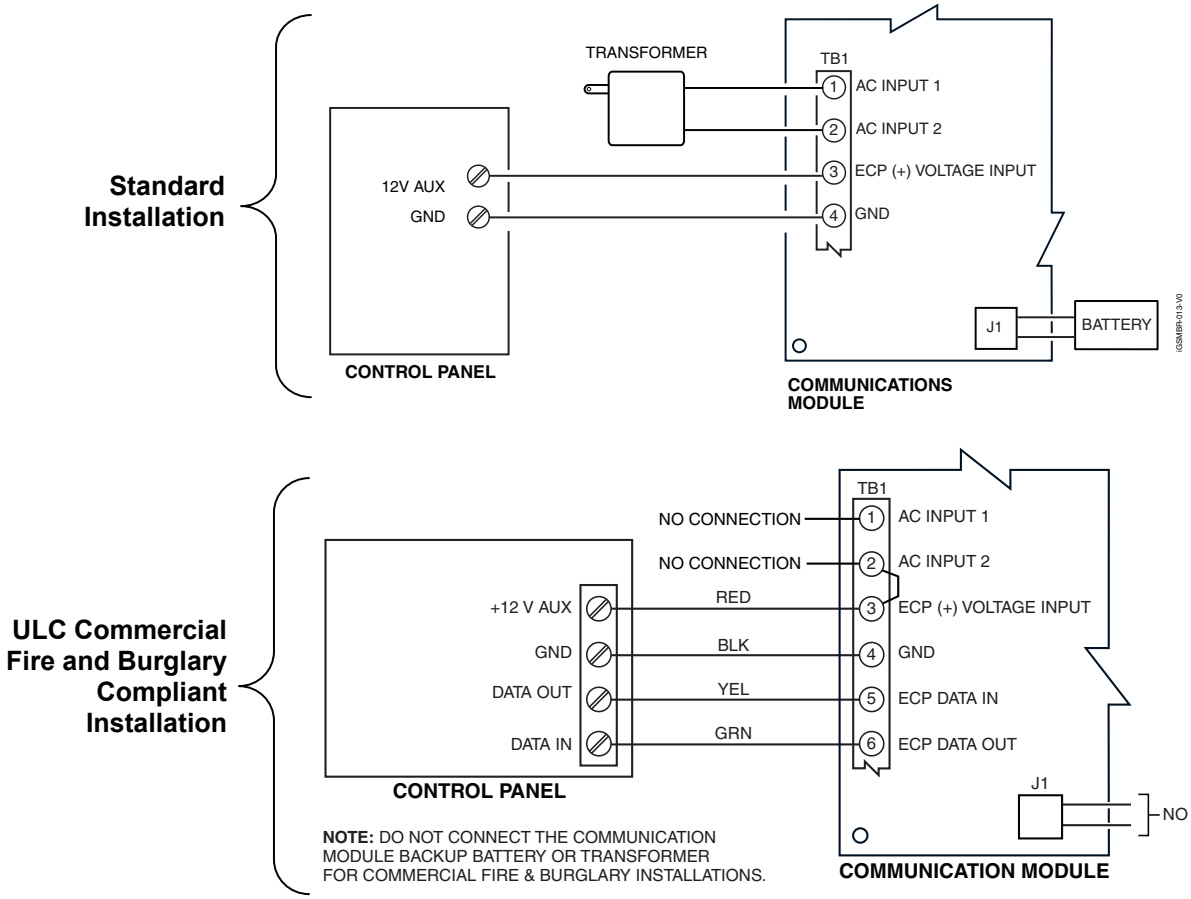

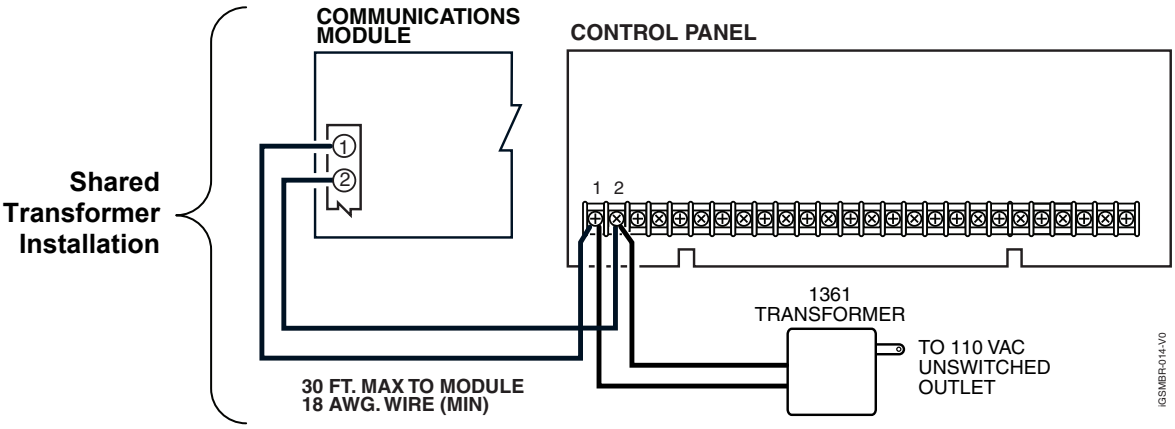

Figure 2-8. Powering the IGSMV

NOTE: When calculating the total load on the auxiliary power output of the control panel, budget 10mA for the IGSMV when using ECP mode.

Backup Battery Connection

The included battery (K14139) is used for backup in the event of power loss to the communications module. It does not provide power to the control panel.

In ULC installations this battery is not connected, and all backup power is supplied by the control panel.

The battery can provide over 24 hours of system life in the event of a power failure.

- A programmable power loss message can alert the AlarmNet Control Center when system power is lost (power loss messages are reported within 1-3 hours of actual loss).
- The module transmits a low-battery message (programmable) when the battery reaches 5.7V ±5%, indicating subsequent messages may not be transmitted.
- The system shuts down when the battery falls below 5.1V, and radio transmissions are no longer possible.
- If system power is restored before the module shuts down, a power restore message is sent within 1-3 hours after power is restored, and the battery is recharged using the IGSMV's built-in battery charger. If system power is restored after the IGSMV has shut down, a power-on reset condition exists, the module initializes itself and the battery will recharge.

Install the battery as follows, and refer to the *Summary of Connections* diagram at the end of this document.

1. Place the battery inside the case back.
2. Snap the right side of the battery clip onto the inside of the case back and secure the left side with the screw provided.

Do not plug the battery in until after you have powered-up the IGSMV.

Initial Power-Up Sequence

Before connecting power, check that the following have been completed:

- If using ECP, 4204 or 2-4204 Mode, terminal block TB1 V+ and GND terminals are connected to the control panel's auxiliary power output: 12VDC nominal.
- Plug in the transformer. Then connect the red and black battery cables to the battery terminals. Connect battery cable to connector J1.
- Power up the control panel. (Initially, all IGSMV programming options are set to the factory default settings.)

Programming the IGSMV

General Information

The IGSMV is designed to deliver alarms via the Internet to an AlarmNet central station or via the AlarmNet-G network, using GSM (Global System for Mobile) technology when the Internet is not available.

The IGSMV uses 256 bit AES (Rijndael) encryption which is required for certain government installations.



The IGSMV module requires an AlarmNet–I account. For new installations, please obtain the account information from the central station prior to programming this module. For replacement installations, the AlarmNet-i account is created automatically when the module is registered.

You can program a IGSMV by one of the following methods:

- Through the AlarmNet Direct website (required to enable Multi-Mode features)
- Through use of a 7720P Programming Tool
- Through a programming mode in the control panel, on panels that support this option (e.g., VISTA-128BP and FBP)

UL Only ECP and Zone Trigger modes have been evaluated by UL.

Using the AlarmNet Direct Website

To program the module via the website (if you are already signed up for this service), go to: https://services.alarmnet.com/AlarmNetDirect/userlogin.aspx

If you are not signed up for this service, click on "Dealer Sign-Up.

Log in and follow the on-screen prompts.

Please have the following information available when programming the module:

1. Primary City ID (two-digit number)
2. Primary Central Station ID (two-digit hexadecimal number)
3. Primary Subscriber ID (four-digit number)
4. MAC ID and MAC CRC number (located on the outside of box and on label inside module)

After programming is complete, you must transfer the data to the module and the module must be registered. Refer to *Section 4: Registration*, for further instructions.

Using a 7720P Programming Tool

Connect the 7720P Programming Tool as shown below. The IGSMV powers the 7720P Programming Tool via the programming jack, and automatically senses the presence of the 7720P when it is plugged in.

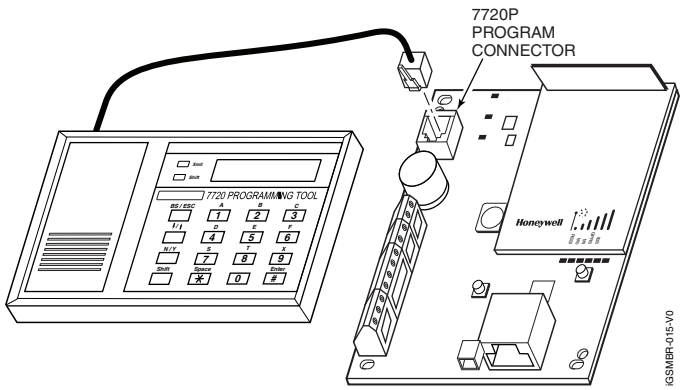

Figure 3-1. Cable Connections

Each key of the 7720P has two possible functions: a normal function and a Shift function.

To perform a normal key function, simply press the desired key.

To perform a Shift function, press the [shift] key, and then press the appropriate key.

The prompts in this document reflect use of the 7720P Programming Tool. The table below lists each normal and shift key function.

Table 3-1. 7720P Normal and Shift Key (shift LED lit) Functions

KEY	NORMAL KEY FUNCTION	SHIFT KEY FUNCTION
BS/ESC	[BS]: Press to delete entry	[ESC]: Press to quit program mode; also can reset programming defaults*
↓/↑	[↓]: Scroll down programming	[↑]: Scroll up programming
N/Y	[N]: Press for "NO" answer	[Y]: Press SHIFT-Y for "YES" answer
SHIFT	Press before pressing a SHIFT key function. Will light SHIFT LED. LED goes out once a key is pressed. Press again for each SHIFT function desired.	
1/A	[1]: For entering the number 1	[A]: For entering letter A
2/B	[2]: For entering the number 2	[B]: For entering letter B
3/C	[3]: For entering the number 3	[C]: For entering letter C
4/D	[4]: For entering the number 4	[D]: For entering letter D
5/E	[5]: For entering the number 5	[E]: For entering letter E
6/F	[6]: For entering the number 6	[F]: For entering letter F
7/S	[7]: For entering the number 7	[S]: For entering letter S
8/T	[8]: For entering the number 8	[T]: For entering letter T
9/X	[9]: For entering the number 9	[X]: For entering letter X
SPACE	[SPACE]: For scrolling option list	No SHIFT function
0	[0]: For entering the number 0	No SHIFT function
#/ENTER	[#/ENTER]: Starts programming mode; Press to accept entries	No SHIFT function

***** Active only when the "Exit Programming Mode" prompt is displayed.

Using the Control Panel Programming Mode

Some control panels support programming of the IGSMV through the control panel programming mode (e.g., VISTA-128BP). If programming through the control panel, only the ECP Mode programming options are available. The "mode" questions will not be displayed, and the mode cannot be changed. For a description of key functions on the control panel keypad, and how they map to the 7720P Programming tool, refer to the control panel's Programming Guide.

Programming Conventions

Programming is accomplished by answering a series of prompts (questions). Most prompts require only a [Y]es or [N]o response, while others require a numerical response (ID numbers, etc.).

The current value is displayed on the second line in parentheses ( ). A "?" indicates an invalid entry.

Use the [ENTER] key to accept the current entry and proceed to the next prompt. If the entered value is invalid, pressing [ENTER] re-displays the prompt; the next prompt is not displayed until a valid answer is entered.

Use the up/down arrow keys to scroll through the programming questions without changing any values. Press the [ESC] key to go to the end of the list of questions.

ECP Mode Programming

The IGSMV supports ECP messaging to communicate with the control panel. LRR-enabled control panels send Contact ID format alarms to the IGSMV directly on the 4-wire console bus. Not all control panels support the LRR interface on ECP, so be sure to check the Installation and Setup Guide of the control panel to see if it supports this feature.

ULC Only ECP Mode has been approved for ULC installations.

Press the [ENTER] key to begin programming.

NOTE: The central station can remotely block access to local device programming. If this has been done, the following prompt appears: **Access to Prog Mode Denied**

NOTE: The default programming values for ECP mode are listed in each prompt below.

Table 3-2: Programming a IGSMV for ECP mode only.

	PROMPTS	ENTRY	OPTIONS	DESCRIPTION
1	**Strt Prog Mode? (Y/N)_**		[Y], [N]	Enters programming mode.
2	**Enter Password:**		[0-9, A-F, N, S, T, X, Y]	If a password has been previously assigned, this prompt appears. Enter a 4-digit password (0-9, A-F, N, S, T, X, Y). The next prompt appears.
3	**Program Device? (Y/N)_**		[Y], [N]	To begin programming the module, press [Y] and go to Prompt 9: "Device Mode." To create a password if none has been assigned, press [N] and go to Prompt 4: "Create Password." To change an existing password, press [N] and go to Prompt 5: "Change Password."
4	**Create Password? (Y/N)_**		[Y], [N]	Passwords can be used to protect account and programming information. If no password has been assigned, this prompt appears after pressing [N] at the "Program Device?" prompt. If a password is desired, press [Y] and go to "Enter Password."
5	**Change Password? (Y/N)_**		[Y], [N]	If a password has already been assigned, this prompt appears after pressing [N] at the "Program Device?" prompt. Press [Y] if you want to change the password. **NOTE:** To clear an existing password, without entering a new one, answer [Y] to the "Change Password?" prompt, then press the [Enter] key when prompted for the new password and its confirmation.

	PROMPTS	ENTRY	OPTIONS	DESCRIPTION
6	**Enter Password**		[0-9, A-F, N, S, T, X, Y]	This prompt is displayed if [Y] was pressed in Prompt 4 or 5. Enter a 4-digit password (0-9, A-F, N, S, T, X, Y).
7	**Verify Password**		[0-9, A-F, N, S, T, X, Y]	Re-enter the password as confirmation. If the password doesn't match the first entry, the following is displayed followed by the "Exit Prog. Mode?" prompt: **Verify Not OK** **PSWD not created** Otherwise, the "Exit Prog. Mode?" prompt is displayed directly.
8	**Exit Prog. Mode? (Y/N)_**		[Y], [N] [ESC]	Exits program mode. Press [N] to go back to Prompt 3. Press [ESC] to load factory defaults. Refer to the *Exiting Programming Mode* paragraph in this section.
9	**Device Mode (ECP)_**		• ECP • Zone Triggers • 4204 Emu • Two 4204s	Press [ENTER] to select **ECP** mode. Press the [space] key to scroll through choices. **Use *Table 3-4* if selecting other choices**.

Important Information Regarding Multi-Mode Options

NOTE: In order for the Multi Mode, Multi Mode Addr, and Remote Access programming fields to appear an account must be created in the AlarmNet Direct website and "Remote Access" must be enabled for the comm device.

Users can receive email notification of system events by using the Multi-Mode feature. In ECP mode, this is accomplished through emulation of a 4204 relay module, or two 4204 relay modules. When "4204-sourced" is selected, the user can be notified of up to four events, plus two additional events if using the optional communication device zones of 6 and 7. When "2-4204-sourced" is selected, the user can be notified of up to eight system events. The Multi-Mode address must match the address of a relay module enabled in the control panel (although you don't actually connect a module). If using "2-4204-sourced," the address of the second module is automatically assigned the next device address after the first 4204. Make sure that address is also enabled in the control panel. Program outputs to trigger on system events the user would like to be notified of through Output Device (Relay) programming in the control panel.

These events are configured at the AlarmNet Total Connect website at: https://services.alarmnet.com/TotalConnect



Multi-Mode (email notification) is intended as a convenience for the user, and does not replace Central Station reporting of critical events (alarms, troubles, etc.).

UL / ULC

Multi-Mode has not been evaluated by UL or ULC.

10	**Multi Mode (Disabled)_**		• Disabled • 4204 Sourced • 2-4204 Sourced	Enable if you want system events sent by email to the user. Select "4204 Sourced" to send up to four events (plus two additional reports triggered by optional hardwire zones 6 and 7), or "2-4204 Sourced" to send eight events. Disable for normal alarm processing and go to Prompt 12: "Primary City ID".
11	**Multi Mode Addr (12)_**		[01-30]	This address must be programmed if using the Multi-Mode (email notification) feature. The device address must be unique from the normal LRR Device Address (Prompt 19) and the Keypad Address used for Remote Access or Direct Wire downloading. The address used must also be enabled as a 4204 relay module in Vista and First Alert control panels. See Important Information above.

	PROMPTS	ENTRY	OPTIONS	DESCRIPTION
Important Information Regarding Primary and Secondary Accounts (Questions 12-18) Account information is provided by the central station administrator. If the control panel supports secondary account reporting, you will need secondary account information. The City ID, CS ID or Subscriber ID of the secondary account must differ from that of the primary account.				
12	**Primary City ID (??)_**		[01-99]	Enter the 2-digit primary city ID, 01-99 (decimal).
13	**Primary CS ID (??)**		[01-FE]	Enter the 2-digit primary central station ID number, 01-FE (HEX).
14	**Primary Sub ID (????)**		[0001-9999]	Enter the 4-digit subscriber account number, 0001-9999 (decimal).
15	**En. 2nd CS Y/N (N)_**		[Y], [N]	Applicable only if the control panel supports Central Station #1 and #2 Category Enable reporting for the LRR device (e.g., VISTA-128BP, FA1660C, etc.). Used if reporting to a second central station is desired. If [N], go to Prompt 19: "Device Address."
16	**2nd City ID (??)_**		[01-99]	Enter the 2-digit secondary city ID, 01-99 (decimal).
17	**2nd CS ID (??)_**		[01-FE]	Enter the 2-digit second central station's ID number, 01-FE (HEX).
18	**2nd Sub ID (????)_**		[0001-9999]	Enter the 4-digit subscriber account number for the second central station, 0001-9999.
19	**Device Address (03)_**		[01-30]	In ECP mode, the IGSMV communicates with the control panel as a Long Range Radio (LRR) device. Enter the appropriate ECP device address. For VISTA-10 and VISTA-20 series control panels, use address 03. For other controls, see the control panel's Installation and Setup Guide. **NOTES:** 1. When programming the control panel, enable the LRR output. 2. The device address must be unique from the "Keypad Address" entered in Prompt 22, and the Multi-Mode Address entered in Prompt 11.
UL / ULC Remote access has not been evaluated by UL or ULC.				
20	**RemoteAccess Y/N (N)_**		[Y], [N]	Press [Y] to allow the end user to access their system via a website. Availability of this service is controlled by the dealer via the web-based programming tool on the AlarmNet Direct website.
21	**Direct Wire Y/N (N)_**		[Y], [N]	Applies only to VISTA-128BP/250BP and FBP Series control panels, and FA1660C and 1700C Series control panels. Enables Direct Wire Downloading over IP. If [N], and if Prompt 20: "Remote Access" is disabled, skip to Prompt 23: "Supervision."
22	**Keypad Address (28)_**		[01-30]	Must be programmed if using either the Remote Access feature or Direct Wire downloading. **NOTES:** 1. This address must also be programmed as an alpha keypad in the control panel or an AUI (advanced user interface) type device, if a full enhanced graphic interface to the system is desired and the control panel supports it. DO NOT connect an actual keypad (or any other device) assigned to this

	PROMPTS	ENTRY	OPTIONS	DESCRIPTION
				address. 2. This address must be unique from the "Device Address" entered in Prompt 19.
23	**Supervision (24 Hours)_**		• 30 Day • 24 Hrs • None Additional options for CN only • 1 Hr • CN UL Line Lvl 3 *(3 Min)* • CN UL Line Lvl 4 *(90 Sec)* • CN UL Line Lvl 5 *(75 Sec)*	The AlarmNet network must hear at least one supervisory message from the module during this supervision period; otherwise, AlarmNet notifies the central station that a communication failure has occurred. (If the supervision period is changed after registration, you must re-register the module.) Press the [space] key to scroll through choices. **UL:** A loss of communications is treated as an Alarm condition. **ULC**: Must be set to" CN UL Line Lvl 3" for ULC-S304 Active Level 3 or ULC-S559 Active Fire installations. All other commercial applications must be set to "24 Hrs".
24	**GSM Rollover Y/N (N)_**		[Y] , [N]	If enabled, all messages (including AlarmNet network supervisory messages) are sent over the GSM network in the event of an Internet failure. If disabled, all messages (except AlarmNet network supervisory messages) are sent automatically over the GSM network in the event of an Internet failure. **UL/ULC**: Must be set to "Y" if 24 hours is selected in Prompt: 23: Supervision. Must be set to "N" for ULC-S304 Active Level 3 or ULC-S559 Active Fire installations where CN UL Line Lvl 3 is selected. **IMPORTANT WARNING:** If set to "Y", AND Prompt 23: Supervision is set to occur less than every 24 hours, this can result in data overage charges on your monthly bill.
25	**GSM 24Hr Tst Y/N (N)_**		[Y], [N]	If enabled a message is sent every 24 hrs over GSM to verify proper operation. If it fails, a Periodic Comm Test Failure message will be sent over Ethernet. **UL/ULC:** Must be set to "Y".
26	**Old Alarm Time 10 Minutes_**		•10 Minutes • 15 Minutes • 30 Minutes • 1 Hour • 2 Hours • 4 Hours • 8 Hours • 12 Hours • 24 Hours	Sets how long an undeliverable alarm is retried for delivery to the central station. If the message is not validated, it is retried until the old alarm time is reached or the message is validated. Press the [space] key to scroll through choices. **UL/ULC:** Must be 10 minutes.
27	**IP Flt Time (60 mins)_**		[01-99]	In the event there is a loss of contact with the network over the Ethernet connection, enter the time delay (in minutes) before the IGSMV notifies the central station. IP failure will always be sent to the central station as Primary Communication Path Failure. **UL/ULC:** Must be one (01) minute.
28	**GSM Flt Time (60 mins)_**		[01-99]	In the event the module detects a communication path failure, enter the time delay (in minutes) before the IGSMV notifies the central station. A GSM failure will always be sent to the central station as Secondary Communication Path Failure. **UL/ULC:** Must be one (01) minute.

	PROMPTS	ENTRY	OPTIONS	DESCRIPTION
29	**Notify Panel Of_ (Neither Fault)**		[Neither fault] [Both IP and GSM Faults]	If "Both IP and GSM Fault" is selected, the device will only notify the control panel if both communication paths fail, but will always send notification of either failure to the central station. **NOTE:** The fault relay output (if programmed) will be triggered only if "Both IP and GSM Faults" is selected. Press the [space] key to scroll through choices. **UL/ULC:** Must be set to "Both IP and GSM Faults".
30	**Flt Rel ON Y/N (N)_**		[Y], [N]	If enabled, the fault open collector output is normally energized to ground, and de-energizes (open circuit) in the event of a module fault. For conditions that trip the fault relay refer to *Module Supervision Features* in Section 1. Set to [Y] if fail-safe mode is desired. See *Wiring for Module Fault Relay* in Section 2. **UL/ULC:** Must be set to "Y."
31	**Pwr Loss Rpt Y/N (Y)_**		[Y], [N]	Sends a primary power loss report to the central station within 1-3 hours after its detection. A restore report is sent within 1-3 hours after power is restored. **UL/ULC Standard Installations** (using transformer and battery)**:** Must be set to "Y". **ULC Commercial Fire & Burglary Installations** (powered from the control panel)**:** Must be set to "N."
32	**Low Bat Rpt Y/N (Y)_**		[Y], [N]	Sends a low-battery report when a low battery condition exists. A low battery restore is automatically sent when the low battery condition clears. **UL/ULC Standard Installations** (using transformer and battery)**:** Must be set to "Y". **ULC Commercial Fire & Burglary Installations** (powered from the control panel)**:** Must be set to "N."
33	**Tamper Rpt Y/N (Y)_**		[Y], [N]	Sends a tamper report when the module detects a tamper condition. A tamper restore is automatically sent when the tamper condition clears. **UL/ULC:** Must be set to "Y."

Important Information Regarding Zone Input Options

ECP mode supports two optional hardwire zone input triggers by making connections to the module's zone 6 and/or zone 7 terminals and programming the appropriate zone trigger options below.

Each zone input can be programmed to cause an alarm under one of the following conditions:

- (V+), where a positive voltage causes an alarm for normally low connections (voltage trigger, NO, NC)
- (V–), where a ground trigger causes an alarm for normally high connections (open collector, NO, NC)
- (EOLR) End of Line Resistor, where the input is supervised by a 2K EOL resistor. The zone can be triggered by open collector, voltage trigger, NO, NC.
- **UL Installations**, V+ is to be set as inverted and V– as non-inverted.

In addition to the above, zones can be programmed for an Inverted Trigger, where the alarm and normal states of the zones are inverted; this can serve a fail-safe supervisory purpose for certain installations.

These zone inputs can also be programmed for restore reporting, and for delayed reporting (NOT for UL installations), which allows time for the user to abort false alarms.

NOTE: Optional hardwire zones report in ADEMCO High-Speed format.

34	**Enable Zn6 Y/N (N)_**		[Y], [N]	Enables alarm reporting for zone 6. If [N], skip to Prompt 39: "Enable Zn7."

	PROMPTS	ENTRY	OPTIONS	DESCRIPTION
35	**Zn6 Trigger Type (V+)_**		• (V+) • (V–) • (EOLR)	Selects the triggering method for this zone input. Press the [space] key to scroll through choices. **UL:** V+ must be set as inverted and V– as non-inverted.
36	**Invert Zn6 Y/N (N)_**		[Y], [N]	Inverts the alarm and normal states of the zone 6 trigger; otherwise uses normal input signal.
37	**Restore Zn6 Y/N (Y)_**		[Y], [N]	Enables restore reporting for zone 6.
38	**Delay Zn6 (secs) (00)_**		[01-15] [00] = no delay	Defines the reporting delay in seconds for zone 6. **UL:** Must be set to 00.
39	**Enable Zn7 Y/N (N)_**		[Y], [N]	Enables alarm reporting for zone 7. If [N], skip to Prompt 44: "Use DHCP."
40	**Zn7 Trigger Type (V)_**		• (V+) • (V–) • (EOLR)	Selects the triggering method for this zone input. Press the [space] key to scroll choices. **UL:** V+ must be set as inverted and V– as non-inverted.
41	**Invert Zn7 Y/N (N)_**		[Y], [N]	Inverts the alarm and normal states of the zone 7 trigger; otherwise, uses normal input signal.
42	**Restore Zn7 Y/N (Y)_**		[Y], [N]	Enables restore reporting for zone 7.
43	**Delay Zn7 (secs) (00)_**		[01-15] [00] = no delay	Defines the reporting delay in seconds for zone 7. **UL:** Must be set to 00.
44	**Use DHCP Y/N (Y)_**		[Y], [N]	Dynamically allocates the IP addresses (recommended); then skip to Prompt 49: "Enable Pwr Save". If [N], uses fixed IP addresses.
45	**NIC IP Address: 255.255.255.255_**		12 digit: xxx.xxx.xxx.xxx	Enter the 4-part address for this device. The 4 parts of the address must be separated by spaces (displayed as periods in Review mode).
46	**Subnet Mask: 255.255.255.255_**		12 digit: xxx.xxx.xxx.xxx	Enter the 32-bit address mask used to indicate the portion (bits) of the IP address that is being used for the subnet address. The 4 parts of the address must be separated by spaces (displayed as periods in Review mode).
47	**Gateway IP Addr: 255.255.255.255_**		12 digit: xxx.xxx.xxx.xxx	Enter the 4-part address assigned to the Gateway. The 4 parts of the address must be separated by spaces (displayed as periods in Review mode).
48	**DNS Serv IP Addr: 255.255.255.255_**		12 digit: xxx.xxx.xxx.xxx	Enter the 4-part IP address assigned to the DNS (Domain Name System) server. The 4 parts of the address must be separated by spaces (displayed as periods in Review mode).
49	**Enable Pwr Save (Y)_**		[Y], [N]	To meet the 24 hour UL battery backup requirement, choose "Y" to enable this feature. If this causes connectivity problems with certain routers or switches, then choose "N" and wire the communications module so it is plugged into a UL listed UPS. **UL:** Must be set to Y.
50	**IP Connection (Present)**		• Present • Auto Detect	Press the [space] key to toggle between the options. Press [ENTER] to select the configuration. If "Present" is chosen, it is assumed that an IP is connected to the device. If it is not detected, a Pri-

	PROMPTS	ENTRY	OPTIONS	DESCRIPTION
				mary Comm Path Failure message will be delivered after the programmed fault time expires. If "Auto Detect" is chosen, the device will always try to use IP to communicate but it will not generate a Primary Comm Path Failure unless it previously detected the presence of IP. As soon as the presence of IP is detected, a Primary Comm Path Restore message is generated and the value of IP Connectivity programming parameter is changed from "Auto Detect" to "Detected". From this point on, the software expects connectivity. The auto detect logic will resume only when the parameter is changed back to "Auto Detect".
51	**Review? Y/N**		[Y] = review [N] = exit	**Reviewing Programming Mode Entries** To review the programming options (to ensure that the correct entries have been made), press [Y]. The programming prompts are displayed again. Use the up/down arrow keys to scroll through the program fields without changing any of the values. If a value requires change, simply type in the correct value. When the last field is displayed, the "REVIEW?" prompt again appears. **To exit the programming mode**, press [N] in response to the "REVIEW?" prompt, and refer to *Exiting Programming Mode* at the end of this section.

ECP Status Codes

When the IGSMV is configured for ECP mode, it sends status messages to the control panels for battery, power, tamper, and network connectivity failures. Some of the control panels (e.g., VISTA-10P, VISTA-15P and VISTA-20P Series) display these on the keypad as "LngRng Radio" followed by a 4-digit code (listed in the table below). In addition, the Contact ID codes (listed in Appendix B) for these conditions are sent to the central station by the module.

UL The information in the following table is based on the VISTA-20 which has not been evaluated with this communication module.

Table 3-3. Common ECP Keypad Display Status Codes

STATUS CODE	DESCRIPTION
0000	Control panel lost communication with IGSMV.
0880	IGSMV tamper detected (cover removed).
4005	IGSMV has lost contact with AlarmNet.
000F	IGSMV is not registered; account not activated.
0019	IGSMV shutdown.
0400	IGSMV power on / reset AND the control panel lost communications with IGSMV.
0C80	IGSMV power on / reset AND tamper detected.
0C8F	IGSMV power on/ reset AND tamper detected AND not registered.
08E0	IGSMV tamper detected and IGSMV battery low.
3000	Primary power loss (will only be displayed in conjunction with another event).
8000	Battery charger failure (will only be displayed in conjunction with another event).
0060	Low battery (will only be displayed in conjunction with another event).

Alternative Modes (Zone Trigger, 4204 and Two-4204)

UL/ULC The LYNX controls have not been evaluated with this communication module.

Zone Trigger Mode

There are six input zones available on the IGSMV. Each zone is selectable for +V, -V, or EOLR trigger. The first zone input can detect both pulsed and steady signals if connected to a bell output. Additionally, the first zone input can be programmed to detect a single pulse (characteristic of a Panic indication on the Lynx, LynxR or LynxR-EN control panel by enabling the Lynx Panic option). If the programming option "Lynx Panic" is enabled, the IGSMV reports an alarm on zone 3. No restores are reported for this zone. If this option is selected, the second physical zone input is ignored.

When using Zone Trigger mode, messages are sent in ADEMCO High-Speed format.

Zones 3, 4, 5, 6 and 7 are voltage trigger inputs located on TB1 pins 6-10. If the Lynx Panic feature is being used, do not connect zone 3 (the second physical zone input).

Refer to Table 3-4 for Zone Trigger Mode programming and follow the prompts that pertain to Zone Trigger Mode. A check mark (✓) indicates whether the prompt applies to that mode.

4204 Emulation Mode

In 4204 Emulation Mode, the IGSMV communicates with a compatible Honeywell VISTA series or First Alert control panel as though it were a 4204 Relay Module. If two 4204s are enabled in the module, it acts as two 4204s at consecutive device addresses. The control panel must be configured to recognize one or two 4204 relay modules accordingly. On VISTA-32FB (or higher) control panels and First Alert equivalents, addresses 6 and 13 should not be used when the secondary 4204 is enabled. Messages are sent in ADEMCO High-Speed format.

NOTE: See your control panel Installation and Setup Guide for the number of 4204 modules supported.

4204 Emulation Mode Options

For control panels that do not support LRR-ECP communication, the 4204 Emulation modes provide a means of sending up to eight unique reports based on defined system conditions. In 4204 mode, the IGSMV functions as a logical 4204 Relay Module, where each relay number, referred to in the module as zone number, can be programmed to send a report based on the output function programmed in the control panel for that relay. Each relay-zone can also be programmed to send a restore message of the reported condition, can be set to delay transmission of messages, and can be programmed to send reports only when a conditional zone is triggered (armed), (see *Important Information Regarding Zone Input Options* later in this section).

In single 4204 mode, the IGSMV supports up to four relay-zones. In Two-4204 mode, the IGSMV functions as two 4204 modules, supporting up to eight relay-zones.

UL 4204 Mode and Two-4204 Mode has not been evaluated.

4204 Relay Outputs map to IGSMV zones as follows:

First 4204 Zones (device address entered in Prompt 14):	**Second 4204 Zones** (device address entered in Prompt 14, plus 1):
Relay 1 = Zone 1 Relay 2 = Zone 2 Relay 3 = Zone 3 Relay 4 = Zone 4 or conditional zone trigger if "report only if armed" is selected in any zone 1-3 when using single 4204 mode.	Relay 1 = Zone 5 Relay 2 = Zone 6 Relay 3 = Zone 7 Relay 4 = Zone 8 or conditional zone trigger if "report only if armed" is selected in any zone 1-7 when using Two-4204 mode.

NOTE: Zone 4 status is not reported when being used as the conditional (armed) trigger zone.	**NOTE:** Zone 8 status is not reported when being used as the conditional (armed) trigger zone or if tamper reporting is enabled.

When using the IGSMV in 4204 Emulation Mode, DO NOT enable the Long-Range Radio module in control panel programming. Instead, enable 4204 relay module address(es) and program the appropriate relay activation functions for the relay-zones being used. In some control panels, it is called "relay programming" and in others it is called "output device programming." It is recommended that "close and stay closed" (usually choice 2) action is selected. Selection of momentary activation will cause the IGSMV to generate an alarm and NOT a restore, even if the IGSMV is programmed to send a restore for the given zone.

In 4204 mode, messages are reported in ADEMCO High-Speed format. Zone alarms (status 7) are reported with "1" (alarm) or "3" (restore) displayed in the zone position for the respective zone (e.g. alarm on zone 2: 5155 5555 7; restore 5355 5555 7). A supervision fault trouble message is automatically sent if the module detects no activity on its connection to the control panel. The message is: 5555 5515 5; restore message is: 5555 5535 5.

Refer to Table 3-4 for 4204 Emulation Mode programming and follow the prompts that pertain to 4204 or Two-4204 mode. A check mark (✓) indicates whether the prompt applies to that mode.

Alternative Mode Programming

Press the [ENTER] key to begin programming and follow the prompts for the mode of operation being programmed.

NOTE: The central station can remotely block access to local device programming. If this has been done, the following prompt appears:

Access to Prog Mode Denied

Table 3-4: Programming a IGSMV for Zone Trigger, 4204 Emulation, or Two-4204 Emulation modes.

	PROMPTS	ZONE TRIG.	4204/ 2-4204	ENTRY	OPTIONS	DESCRIPTION
1	**Strt Prog Mode? Y/N_**	✓	✓		[Y], [N]	Enters programming mode.
2	**Enter Password**	✓	✓		[0-9, A-F, N, S, T, X, Y]	If a password has been previously assigned, this prompt appears. Enter a 4-digit password (0-9, A-F, N, S, T, X, Y). The next prompt appears.
3	**Program Device? Y/N_**	✓	✓		[Y], [N]	To begin programming the module, press [Y] and go to Prompt 9: "Device Mode." To create a password if none has been assigned, press [N] and go to Prompt 4: Create Password. To change an existing password, press [N] and go to Prompt 5: "Change Password."
4	**Create Password? Y/N_**	✓	✓		[Y], [N]	Passwords can be used to protect account and programming information. If no password has been assigned, this prompt appears after pressing [N] at the "Program Device?" prompt. If a password is desired, press [Y] and go to Prompt 6: "Enter Password."

	PROMPTS	ZONE TRIG.	4204/ 2-4204	ENTRY	OPTIONS	DESCRIPTION
5	**Change Password? Y/N_**	✓	✓		[Y], [N]	If a password has already been assigned, this prompt appears after pressing [N] at the "Program Device?" prompt. Press [Y] if you want to change the password. **NOTE:** To clear an existing password, without entering a new one, answer [Y] to the "Change Password?" prompt, then press the [Enter] key when prompted for the new password and its confirmation.
6	**Enter Password**	✓	✓		[0-9, A-F, N, S, T, X, Y]	This prompt is displayed if [Y] was pressed in Prompt 4 or 5. Enter a 4-digit password (0-9, A-F, N, S, T, X, Y).
7	**Verify Password**	✓	✓		[0-9, A-F, N, S, T, X, Y]	Re-enter the password as confirmation. If the password doesn't match the first entry, the following is displayed followed by the "Exit Prog. Mode?" prompt: **Verify Not OK** **PSWD not created** Otherwise, the "Exit Prog. Mode?" prompt is displayed directly.
8	**Exit Prog. Mode? Y/N_**	✓	✓		[Y], [N] [ESC]	Exits program mode. Press [N] to go back to Prompt 3. Press [ESC] to load factory defaults. Refer to the *Exiting Programming Mode* paragraph in this section.
9	**Device Mode (ECP)_**	✓	✓		• ECP • Zone Trig. • 4204 Emu • Two 4204s	Press the [space] key to scroll through the modes of operation. Press [ENTER] to select mode. **Use *Table 3-2* for ECP mode programming.**
	Important Information Regarding Multi-Mode In Zone Trigger mode, the options for Multi-Mode are "Enabled" or "Disabled." If enabled, whenever a zone on the communication device is triggered, a corresponding email message is sent INSTEAD of normal central station reports. Cover tamper will send email event 8. All communication device system events (such as power loss, low battery, etc.) are still sent to AlarmNet. Events used to send email messages are defined on the Honeywell Total Connect web site, and must correspond to events triggering the hardwired zones.					
	✓ Multi-Mode (email notification) is intended as a convenience for the user, and does not replace Central Station reporting of critical events (alarms, troubles, etc.). **UL** Multi-Mode has not been evaluated by UL.					
10	**Multi Mode (Disabled)_**	✓			• Enabled • Disabled	Enable if you want system events sent by email to the user. Disable for normal alarm processing.
	Important Information Regarding Primary Account (Questions 11-13) Account information is provided by the central station administrator.					
11	**Primary City ID (??)_**	✓	✓		[01-99]	Enter the 2-digit primary city ID, 01-99 (decimal).
12	**Primary CS ID (???)**	✓	✓		[01-FE]	Enter the 2-digit primary central station ID number, 01-FE (HEX).

	PROMPTS	ZONE TRIG.	4204/ 2-4204	ENTRY	OPTIONS	DESCRIPTION
13	**Primary Sub ID (????)**	✓	✓		[0001-9999]	Enter the 4-digit subscriber account number, 0001-9999 (decimal).
14	**Device Address (12)_**		✓		[01-15]	The IGSMV communicates with the control panel as a 4204 relay module. Enter the appropriate address. For VISTA-10P, and FA130CP Series control panels, this must be address 12. For other controls, see the control panel's Installation and Setup Guide. **NOTES:** 1. The 4204 protocol limits address range to 01-15. If using 2-4204 mode, the IGSMV assigns the second 4204 to the next higher device address (e.g., if entering address 12 for the first 4204, then address 13 is automatically assigned to the second 4204 module). Program the control panel accordingly. 2. The device address(es) must be unique from the "Keypad Address" entered in Prompt 17 and any other address used on the control panel.
UL / ULC	Remote access has not been evaluated by UL or ULC.					
15	**RemoteAccess Y/N (N)_**		✓		[Y], [N]	Press [Y] to allow the end user to access their system via a website. Availability of this service is controlled by the dealer via the web-based programming tool on the AlarmNet Direct website.
16	**Direct Wire Y/N (N)_**		✓		[Y], [N]	Applies only to VISTA-128BP/250BP and FBP Series control panels, and FA1660C and 1700C Series control panels. Enables Direct Wire Downloading over IP. If [N], and if Prompt 15: "Remote Access" is disabled, skip to Prompt 18: "Supervision."
17	**Keypad Address (28)_**		✓		[01-30]	This address must be programmed if using either the Remote Access feature or Direct Wire downloading. Enter the appropriate device address. **NOTES:** 1. This address must also be programmed as an alpha keypad in the control panel or an AUI (Advanced User Interface) type device, if a full enhanced graphic interface to the system is desired and the control panel supports it. DO NOT connect an actual keypad (or any other device) assigned to this address. 2. This address must be unique from the "Device Address" entered in Prompt 14, and cannot equal that device address plus 1 (one) if using 2-4204 mode.

	PROMPTS	ZONE TRIG.	4204/ 2-4204	ENTRY	OPTIONS	DESCRIPTION
18	**Supervision (24 Hours)_**	✓	✓		• 30 Day • 24 Hrs • None Additional options for CN only • 1 Hr • CN UL Line Lvl 3 *(3 Min)* • CN UL Line Lvl 4 *(90 Sec)* • CN UL Line Lvl 5 *(75 Sec)*	The AlarmNet network must hear at least one supervisory message from the module during this supervision period; otherwise, AlarmNet notifies the central station that a communication failure has occurred. (If the supervision period is changed after registration, you must re-register the module.) Press the [space] key to scroll through choices. **UL**: A loss of communications is treated as an Alarm condition. **ULC**: Must be set to" CN UL Line Lvl 3" for ULC-S304 Active Level 3 or ULC-S559 Active Fire installations. All other commercial applications must be set to "24 Hrs".
19	**GSM Rollover Y/N (N)_**	✓	✓		[Y], [N]	If enabled, all messages (including AlarmNet network supervisory messages) are sent over the GSM network in the event of an Internet failure. If disabled, all messages (except AlarmNet network supervisory messages) are sent automatically over the GSM network in the event of an Internet failure. **UL/ULC**: Must be set to "Y" if 24 hours is selected in Prompt: 23: Supervision. Must be set to "N" for ULC-S304 Active Level 3 or ULC-S559 Active Fire installations where CN UL Line Lvl 3 is selected. **IMPORTANT WARNING:** If set to "Y", AND Prompt 23: Supervision is set to occur less than every 24 hours, this can result in data overage charges on your monthly bill.
20	**GSM 24Hr Tst Y/N (N)_**	✓	✓		[Y], [N]	If enabled a message is sent every 24 hrs over GSM to verify proper operation. If it fails, a Periodic Comm Test Failure message will be sent over Ethernet. **UL/ULC:** Must be set to "Y".
21	**Old Alarm Time 10 Minutes_**	✓	✓		• 10 Min • 15 Min • 30 Min • 1 Hr • 2 Hrs • 4 Hrs • 8 Hrs • 12 Hrs • 24 Hrs	Sets how long an undeliverable alarm is retried for delivery to the central station. If the message is not validated, it is retried until the old alarm time is reached or the message is validated. Press the [space] key to scroll through choices. **UL/ULC:** Must be set to 10 minutes.
22	**IP Flt Time (60 mins)_**	✓	✓		[01-99]	In the event there is a loss of contact with the network over the Ethernet connection, enter the time delay (in minutes) before the IGSMV notifies the central station. IP failure will always be sent to the central station as Primary Communication Path Failure. **UL/ULC:** Must be one (01) minute.

	PROMPTS	ZONE TRIG.	4204/ 2-4204	ENTRY	OPTIONS	DESCRIPTION
23	**GSM Flt Time (60 mins)_**	✓	✓		[01-99]	In the event the module detects a communication path failure, enter the time delay (in minutes) before the IGSMV notifies the central station. A GSM failure will always be sent to the central station as Secondary Communication Path Failure. **UL/ULC:** Must be one (01) minute.
24	**Notify Panel Of_ (Neither Fault)_**	✓	✓		[Neither fault] [Both IP and GSM Faults]	If "Both IP and GSM Fault" is selected, the device will only notify the control panel if both communication paths fail, but will always send notification of either failure to the central station. **NOTE:** The fault relay output (if programmed) will be triggered only if "Both IP and GSM Faults" is selected. Press the [space] key to scroll through choices. **UL/ULC:** Must be set to "Both IP and GSM Faults".
25	**Flt Rel ON Y/N (N)_**	✓	✓		[Y], [N]	If enabled, the fault open collector output is normally energized to ground, and de-energizes (open circuit) in the event of a module fault. For conditions that trip the fault relay refer to *Module Supervision Features* in Section 1. Set to [Y] if fail-safe mode is desired. See *Wiring for Module Fault Relay* in Section 2. **UL/ULC:** Must be set to "Y".
26	**Pwr Loss Rpt Y/N (Y)_**	✓	✓		[Y], [N]	Sends a primary power loss report to the central station within 1-3 hours after its detection. A restore report is sent within 1-3 hours after power is restored. **UL/ULC Standard Installations** (using transformer and battery)**:** Must be set to "Y". **ULC Commercial Fire & Burglary Installations** (powered from the control panel)**:** Must be set to "N."
27	**Low Bat Rpt Y/N (Y)_**	✓	✓		[Y], [N]	Sends a low-battery report when a low battery condition exists. A low-battery restore is automatically sent when the low battery condition clears. **UL/ULC Standard Installations** (using transformer and battery)**:** Must be set to "Y". **ULC Commercial Fire & Burglary Installations** (powered from the control panel)**:** Must be set to "N."
28	**Tamper Rpt Y/N (Y)_**	✓	✓		[Y], [N]	Sends a tamper report when the module detects a tamper condition. A tamper restore is automatically sent when the tamper condition clears. **UL/ULC:** Must be set to "Y".
29	**Lynx Panic Y/N (N)_**	✓			[Y], [N]	Applies only if used with a Lynx, LynxR or LynxR-EN control LRR trigger connected to the module's zone terminal. Reports a Panic alarm on zone 3 when the module detects a single pulse on zone 1. No restores are generated for a Panic alarm. **UL/ULC:** The LYNX controls have not been

	PROMPTS	ZONE TRIG.	4204/ 2-4204	ENTRY	OPTIONS	DESCRIPTION
						evaluated with this communication module.

Important Information Regarding Zone Input Options

If desired, **4204 mode** supports two optional hardwire zone input triggers by making connections to the module's zone 6 and/or zone 7 terminals and programming the appropriate zone trigger options below.

NOTE: These triggers are not available when using 2-4204 mode.

Zone Trigger Mode provides six hardwire zone input triggers by making connections to the module's zone terminals and programming the appropriate zone trigger options below. Zones are numbered 1-7, with zone 2 serving as a reporting zone only (see Bell Output Zone below).

Bell Output Zone 1 (and 2): The zone 1 terminal can detect both pulsed and steady signals. If connecting the bell output to the IGSMV zone causes a bell fault on the control panel, enable the "Trip Inputs 1or2" option. The IGSMV reports an alarm on zone 1 (fire) when it detects a pulsed signal and an alarm on zone 2 (burglary) when it detects a steady signal.

UL: Use of the Bell output is not supported.

Telco Zone and Open/Close Zone: Dedicated zones can be assigned as the Telco fault zone and/or an open/close (arm/disarm) reporting zone. When triggered, these zones report a Telco line fault or open/close report respectively, in ADEMCO High-Speed format. Connect the appropriate trigger from the control panel to the selected zone input for each of these options.

Input Trigger Types: Triggering of each zone input can be programmed to cause an alarm under one of the following conditions:

- (V+), where a positive voltage causes an alarm for normally low connections (voltage trigger, NO, NC)
- (V–), where a ground trigger causes an alarm for normally high connections (open collector, NO, NC)
- (EOLR) End of Line Resistor, where the input is supervised by a 2K EOL resistor. The zone can be triggered by open collector, voltage trigger, NO, NC.
- **UL Installations**, V+ is to be set as inverted and V– as non-inverted.

Inverted Trigger: Zones can be programmed for inverted trigger, where the alarm and normal states of the zones are inverted; this can serve a fail-safe supervisory purpose for certain installations.

Restore and Delayed Reports: Zone inputs can be programmed for restore reporting, and for delayed reporting (NOT for UL installations) allowing time for the user to abort false alarms.

UL/ULC: Zone restoral must be enabled.

Report Only if Armed option: To help eliminate redundant reports, zone alarms can be restricted to report only if a conditional zone is triggered (armed). If this feature is desired, the conditional zone is automatically used as the "arming" zone. Connect the appropriate control panel trigger to the conditional (arming) zone. The trigger must be programmed as necessary in the control panel.
The conditional (arming) zone on the module is a different dedicated zone for each programming mode, as follows:

Mode	Conditional (Arming) Zone
Zone Trigger	7
4204	4
2-4204	8

IMPORTANT: If any zone (zones 1-6 in zone trigger mode, zones 1-3 in 4204 mode, zones 1-7 in 2-4204 mode) is set for Report Only if Armed, the conditional (arming) zone becomes unavailable for reporting (as it is reserved for the "arming" trigger connection).

30	**Trip Inputs 1or2 w/Bell Out (N)_**	✓			[Y], [N]	Use if the zone 1 connection to the control panel's bell output causes a bell fault at the control panel. **NOTES:** 1. If used, EOLR trigger type is not available for zones 1 and 3. 2. Do not use with Lynx controls.

	PROMPTS	ZONE TRIG.	4204/ 2-4204	ENTRY	OPTIONS	DESCRIPTION
31	**Telco Zone (0)_**	✓	✓		Zone Trig: [3-7] 4204: [1-4] 2-4204: [1-8] [0] = not used	See Important Information Regarding Zone Input Options on previous page. Enter the zone number to be used for Telco line fault reports. This zone assignment must be unique from the open/close zone selected in Prompt 32. **Zone Trigger Mode:** If any zone is programmed for "report only if armed," zone 7 cannot be used. If Lynx Panic is enabled, zone 3 cannot be used. **4204 Mode:** If any zone is programmed for "report only if armed," zone 4 cannot be used. **2-4204 Mode:** If any zone is programmed for "report only if armed," or if tamper is enabled, zone 8 cannot be used. **NOTE:** Connect the Telco line fault output (or relay output programmed for "Telco line fault") to the Telco zone.
32	**Open/Close Zone (0)_**	✓	✓		Zone Trig: [3-7] 4204: [1-4] 2-4204: [1-8] [0] = not used	Enter the zone number to be used for open/close (arm/disarm) reports. This zone assignment must be unique from the Telco zone selected in Prompt 31. **Zone Trigger Mode:** If any zone is programmed for "report only if armed," zone 7 cannot be used as an open/close zone. If Lynx Panic is enabled, zone 3 cannot be used. **4204 Mode:** If any zone is programmed for "report only if armed," zone 4 cannot be used as an open/close zone. **2-4204 Mode:** If any zone is programmed for "report only if armed," or if tamper is enabled, zone 8 cannot be used as an open/close zone. **NOTE:** Connect an open/close (arm/disarm) trigger (or relay output) from the control panel to the open/close zone.
33	**Zn1 Trigger Type (V+)_**	✓			• (V+) • (V–) • (EOLR)	Selects the triggering method for this zone input. Press the [space] key to scroll through choices. **UL:** V+ must be set as inverted and V– as non-inverted.
34	**Restore Zn1 Y/N (Y)_**	✓	✓		[Y], [N]	Enables restore reporting for zone 1. **UL/ULC:** Must be set to "Y."
35	**Delay Zn1 (secs) (00)_**	✓	✓		[01-15] [00] = no delay	Defines the reporting delay in seconds for zone 1. **UL/ULC:** Must be set to "00."
36	**Rpt Zn1 ONLY if Armed (N)_**	✓	✓		[Y], [N]	Report alarms on zone 1 ONLY if the conditional zone (zone 7 in zone trigger mode; zone 4 in 4204 mode; or zone 8 in 2-4204 mode) is triggered (armed). If [N], always reports alarms on zone 1.

	PROMPTS	ZONE TRIG.	4204/ 2-4204	ENTRY	OPTIONS	DESCRIPTION
37	**Invert Zn2 Y/N (N)_**	✓			[Y], [N]	Inverts the alarm and normal states of the zone 2 trigger; otherwise uses normal input signal.
38	**Restore Zn2 Y/N (Y)_**	✓	✓		[Y], [N]	Enables restore reporting for zone 2. **UL/ULC:** Must be set to "Y."
39	**Delay Zn2 (secs) (00)_**	✓	✓		[01-15] [00] = no delay	Defines the reporting delay in seconds for zone 2. **UL/ULC:** Must be set to "00."
40	**Rpt Zn2 ONLY if Armed (N)_**	✓	✓		[Y], [N]	Reports alarms on zone 2 ONLY if the conditional zone (zone 7 in zone trigger mode; zone 4 in 4204 mode; zone 8 in 2-4204 mode) is triggered (armed). If [N], always reports alarms on zone 2.
If Lynx Panic is enabled, then skip to Prompt 45: "Rpt Zn3 ONLY if Armed."						
41	**Zn3 Trigger Type (V+)_**	✓			• (V+) • (V–) • (EOLR)	Selects the triggering method for this zone input. Press the [space] key to scroll through choices. **UL:** V+ must be set as inverted and V– as non-inverted.
42	**Invert Zn3 Y/N (N)_**	✓			[Y], [N]	Inverts the alarm and normal states of the zone 3 trigger; otherwise uses normal input signal.
43	**Restore Zn3 Y/N (Y)_**	✓	✓		[Y], [N]	Enables restore reporting for zone 3. **UL/ULC:** Must be set to "Y."
44	**Delay Zn3 (secs) (00)**	✓	✓		[01-15] [00] = no delay	Defines the reporting delay in seconds for zone 3. **UL/ULC:** Must be set to "00."
45	**Rpt Zn3 ONLY if Armed (N)_**	✓	✓		[Y], [N]	Reports alarms on zone 3 ONLY if the conditional zone (zone 7 in zone trigger mode; zone 4 in 4204 mode; zone 8 in 2-4204 mode) is triggered (armed). If [N], always reports alarms on zone 3. **4204 mode:** If any zone is programmed to "Report Only if Armed," skip to Prompt 56: "Enable Zn6."
46	**Zn4 Trigger Type (V+)_**	✓			• (V+) • (V–) • (EOLR)	Selects the triggering method for this zone input. Press the [space] key to scroll through choices. **UL:** V+ must be set as inverted and V– as non-inverted.
47	**Invert Zn4 Y/N (N)_**	✓			[Y], [N]	Inverts the alarm and normal states of the zone 4 trigger; otherwise uses normal input signal.
48	**Restore Zn4 Y/N (Y)_**	✓	✓		[Y], [N]	Enables restore reporting for zone 4. **UL/ULC:** Must be set to "Y."
49	**Delay Zn4 (secs) (00)**	✓	✓		[01-15] [00] = no delay	Defines the reporting delay in seconds for zone 4. **UL/ULC:** Must be set to "00."

	PROMPTS	ZONE TRIG.	4204/ 2-4204	ENTRY	OPTIONS	DESCRIPTION
50	**Rpt Zn4 ONLY if Armed (N)_**	✓	2-4204 only		[Y], [N]	Reports alarms on zone 4 ONLY if the conditional zone (zone 7 in zone trigger mode; zone 8 in 2-4204 mode) is triggered (armed). If [N], always reports alarms on zone 4.
51	**Zn5 Trigger Type (V+)_**	✓			• (V+) • (V–) • (EOLR)	Selects the triggering method for this zone input. Press the [space] key to scroll through choices. **UL:** V+ must be set as inverted and V– as non-inverted.
52	**Invert Zn5 Y/N (N)_**	✓			[Y], [N]	Inverts the alarm and normal states of the zone 5 trigger; otherwise uses normal input signal.
53	**Restore Zn5 Y/N (Y)_**	✓	2-4204 only		[Y], [N]	Enables restore reporting for zone 5. **UL/ULC:** Must be set to "Y."
54	**Delay Zn5 (secs) (00)_**	✓	2-4204 only		[01-15] [00] = no delay	Defines the reporting delay in seconds for zone 5. **UL/ULC:** Must be set to "00."
55	**Rpt Zn5 ONLY if Armed (N)_**	✓	2-4204 only		[Y], [N]	Reports alarms on zone 5 ONLY if the conditional zone (zone 7 in zone trigger mode; zone 8 in 2-4204 mode) is triggered (armed). If [N], always reports alarms on zone 5.
56	**Enable Zn6 Y/N (N)_**		4204 only		[Y], [N]	Enables alarm reporting for zone 6. If [N], skip to Prompt 62: "Enable Zn7."
57	**Zn6 Trigger Type (V+)_**	✓	4204 only		• (V+) • (V–) • (EOLR)	Selects the triggering method for this zone input. Press the [space] key to scroll through choices. **UL:** V+ must be set as inverted and V– as non-inverted.
58	**Invert Zn6 Y/N (N)_**	✓	4204 only		[Y], [N]	Inverts the alarm and normal states of the zone 6 trigger; otherwise uses normal input signal.
59	**Restore Zn6 Y/N (Y)_**	✓	✓		[Y], [N]	Enables restore reporting for zone 6. **UL/ULC:** Must be set to "Y."
60	**Delay Zn6 (secs) (00)_**	✓	✓		[01-15] [00] = no delay	Defines the reporting delay in seconds for zone 6. **UL/ULC:** Must be set to "00."
61	**Rpt Zn6 ONLY if Armed (N)_**	✓	✓		[Y], [N]	Reports alarms on zone 6 ONLY if the conditional zone (zone 7 in zone trigger mode; zone 4 in 4204 mode; zone 8 in 2-4204 mode) is triggered (armed). If [N], always reports alarms on zone 6.
62	**Enable Zn7 Y/N (N)_**		4204 only		[Y], [N]	Enables alarm reporting for zone 7. If [N], skip to Prompt 70: "Use DHCP."
63	**Zn7 Trigger Type (V+)_**	✓	4204 only		• (V+) • (V–) • (EOLR)	Selects the triggering method for this zone input. Press the [space] key to scroll through choices. **UL:** V+ must be set as inverted and V– as non-inverted.

	PROMPTS	ZONE TRIG.	4204/ 2-4204	ENTRY	OPTIONS	DESCRIPTION
64	**Invert Zn7 Y/N (N)_**	✓	4204 only		[Y], [N]	Inverts the alarm and normal states of the zone 7 trigger; otherwise uses normal input signal.
65	**Restore Zn7 Y/N (Y)_**	✓	✓		[Y], [N]	Enables restore reporting for zone 7. **Zone Trigger mode:** This question will only be displayed if zone 7 is not used as the conditional (arming) trigger zone. **UL/ULC:** Must be set to "Y."
66	**Delay Zn7 (secs) (00)_**	✓	✓		[01-15] [00] = no delay	Defines the reporting delay in seconds for zone 7. **Zone Trigger mode:** This question will only be displayed if zone 7 is not used as the conditional (arming) trigger zone. **UL/ULC:** Must be set to "00."
67	**Rpt Zn7 ONLY if Armed (N)_**		✓		[Y], [N]	Reports alarms on zone 7 ONLY if the conditional zone (zone 4 in 4204 mode; zone 8 in 2-4204 mode) is triggered (armed). If [N], always reports alarms on zone 7. **2-4204 mode:** If any zone is programmed to "Report Only if Armed," or if tamper is enabled, skip to Prompt 70: "Use DHCP."
68	**Restore Zn8 Y/N (Y)_**		2-4204 only		[Y], [N]	Enables restore reporting for zone 8. **UL/ULC:** Must be set to "Y."
69	**Delay Zn8 (secs) (00)_**		2-4204 only		[01-15] [00] = no delay	Defines the reporting delay in seconds for zone 8. **UL/ULC:** Must be set to "00."
70	**Use DHCP Y/N (Y)_**	✓	✓		[Y], [N]	Dynamically allocates the IP addresses (recommended); then skip to Prompt 75: "Enable Pwr Save". If [N], uses fixed IP addresses.
71	**NIC IP Address: 255.255.255.255_**	✓	✓		12 digit: xxx.xxx.xxx.xxx	Enter the 4-part address for this device. The 4 parts of the address must be separated by spaces (displayed as periods in Review mode).
72	**Subnet Mask: 255.255.255.255_**	✓	✓		12 digit: xxx.xxx.xxx.xxx	Enter the 32-bit address mask used to indicate the portion (bits) of the IP address that is being used for the subnet address. The 4 parts of the address must be separated by spaces (displayed as periods in Review mode).
73	**Gateway IP Addr: 255.255.255.255_**	✓	✓		12 digit: xxx.xxx.xxx.xxx	Enter the 4-part address assigned to the Gateway. The 4 parts of the address must be separated by spaces (displayed as periods in Review mode).
74	**DNS Serv IP Addr: 255.255.255.255_**	✓	✓		12 digit: xxx.xxx.xxx.xxx	Enter the 4-part IP address assigned to the DNS (Domain Name System) server. The 4 parts of the address must be separated by spaces (displayed as periods in Review mode).
75	**Enable Pwr Save (Y)_**	✓	✓		[Y], [N]	To meet the 24 hour UL battery backup requirement, choose "Y" to enable this feature. If this causes connectivity problems with certain routers or switches, then choose "N" and wire the communications module so it is powered from a UL listed UPS.

	PROMPTS	ZONE TRIG.	4204/ 2-4204	ENTRY	OPTIONS	DESCRIPTION
76	**IP Connection (Present)**	✓	✓		• Present • Auto Detect	Press the [space] key to toggle between the options. Press [ENTER] to select the configuration. If "Present" is chosen, it is assumed that an IP is connected to the device. If it is not detected, a Primary Comm Path Failure message will be delivered after the programmed fault time expires. If "Auto Detect" is chosen, the device will always try to use IP to communicate but it will not generate a Primary Comm Path Failure unless it previously detected the presence of IP. As soon as the presence of IP is detected, a Primary Comm Path Restore message is generated and the value of IP Connectivity programming parameter is changed from "Auto Detect" to "Detected". From this point on, the software expects connectivity. The auto detect logic will resume only when the parameter is changed back to "Auto Detect".
77	**Review? Y/N**	✓	✓		[Y] = review [N] = exit	**Reviewing Programming Mode Entries** To review the programming options (to ensure that the correct entries have been made), press [Y]. The programming questions are displayed again. Use the up/down arrow keys to scroll through the program fields without changing any of the values. If a value requires change, simply type in the correct value. When the last field is displayed, the "REVIEW?" question again appears. **To exit the programming mode**, press [N] in response to the "REVIEW?" question, and refer to *Exiting Programming Mode* below.

Exiting Programming Mode

To exit the programming mode, press [N] in response to the "REVIEW?" question. Then press [Y] to the "Exit Prog Mode?" question. Upon exiting, the root file is updated to log the changes made. A message is displayed telling the user that this step is being executed. When complete, the message "DONE" is displayed to indicate the file was successfully uploaded.



If critical configuration changes were made, such as the mode of operation, the IGSMV will reset to ensure that the programming features are enabled.

If the file is not successfully uploaded, one of the following prompts will be displayed. Follow the steps shown below until the upload is successful.

Display	Description	What to do
Cannot Upload Try Again? Y/N_	IGSMV module is not yet initialized.	Wait for RSSI LEDs to be lit. Press [Y].
Failed to Update Root File!	Network problem, or you answered "N" to "Cannot Upload Try Again?" prompt.	Initiate the Force Server Update Command by pressing the [0] key; refer to *Section 5: Programmer Keyboard Commands.*

Setting Factory Defaults

To reset the programming options to factory-default values, press [ESC] at the "Exit Prog Mode?" prompt.

Set Default? Y/N_	Press [Y] to reset factory default values. Press [N] to cancel this function.

If you press [Y], all programmed values are reset to the original factory settings. PLEASE NOTE THAT THIS WILL ERASE ANY PASSWORD THAT MAY HAVE BEEN ENTERED. After pressing [Y], the Create Password prompt appears (see Prompt 4).

Registration

Registering the IGSMV

Once you have initialized and programmed the IGSMV, it must be registered to enable the account. The registration status is indicated below:

LED	DESCRIPTION
STATUS (green)	ON – Is NOT registered with AlarmNet. OFF – Is registered with AlarmNet.
MESSAGE (yellow)	ON – Message transmission pending. QUICK PERIODIC BLINK - Normal SLOW BLINK – In unison with green LED, Registration in progress.
FAULT (red)	OFF – No fault present.

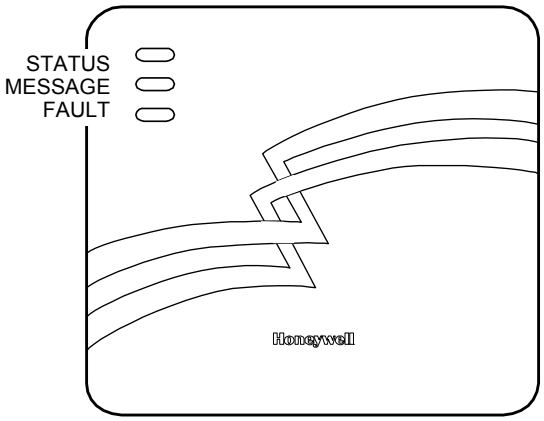

Upon completion of the registration process, the IGSMV transmits a registration message and receives a registration validation indicating that the account is now enabled. Wait for the "Registration Success" message to appear, regardless of which registration method used.

You can register the IGSMV by one of the following methods:

- Through the AlarmNet Direct website
- Through use of the Tamper Switch
- Through use of a 7720P Programming Tool
- By phone

Register through the AlarmNet Direct Website

The IGSMV can be registered through the AlarmNet Direct Website. To program the module via the website (if you are already signed up for this service), go to:

https://services.alarmnet.com/AlarmNetDirect/

Log in and follow the on-screen prompts.

If you are not signed up for this service, click on “Dealer Signup” from the login screen to gain access to the Honeywell web-based programming.

Dealer Sign-Up Direct Link: https://services.alarmnet.com/AlarmnetDirectP_SignUp/

You will be instructed how to proceed upon completing the sign-up form. Only one sign-up per dealer is required. Once an initial user is established, additional logins may be created by that user.

NOTE: Central Stations sign up by contacting AlarmNet Administration at 800-222-6525 option3.

Please have the following information available when programming the device:

- Primary City ID (two-digit number)
- Primary Central Station ID (two-digit hexadecimal number)

- Primary Subscriber ID (four-digit number)
- MAC ID and MAC CRC number (located on outside of box and on label inside module)

Once module is registered, you may log out of the AlarmNet Direct website.

Register using the Tamper Switch

Initiate the registration sequence by clicking the Tamper Switch three times.

You can monitor the registration process by viewing the Status Display. The Message (yellow) LED and the Status (green) LED will blink slowly in unison while registration is in progress.

Once the registration has been completed successfully, the IGSMV enters normal operating mode; the Status (green) LED goes out and the Message (yellow) LED is lit to indicate that the Power On / Reset message is waiting to be sent. This message will appear at the receiving station as "E339 C08xx", where "xx" is the ECP device address. The description may read "Trouble – Exp. Mod. Reset". If registration is not validated within 90 seconds, the IGSMV times out, and the (green) LED will be lit (solid).

The Power On / Reset message will be sent in ADEMCO High-Speed format if the module is programmed for zone trigger, 4204 or 2x4204 modes.

If repeated registration attempts time out, check your Internet connection and RSSI level, and verify that IGSMV account information has been entered correctly.

Register using the Programming Tool

The interactive registration feature allows the installer to register the IGSMV through a series of keyboard commands on the 7720P Programming Tool. This method of registration lets the installer monitor the registration process.

Registering …	Once the installation is complete, press the [Shift] and the up arrow **[↑]** key on the 7720P. The registration message is sent and the unit waits for the acknowledgment.
Registration SUCCESS	If this is a new installation and the city, central station, and customer numbers have been correctly entered, the IGSMV is registered and this message is displayed. The IGSMV is now in full service and available for alarm reporting to the central station.

Possible Errors

Registration BAD Timed Out	Displayed if no response to the registration request is received.
Registration BAD Pri Sub ID BAD	Indicates the city, central station, or customer number for the labeled account(s) is not accepted. The ID information was either entered incorrectly, or the central station failed to pre-authorize programmed ID numbers with AlarmNet customer service.
Registration BAD 2nd Sub ID BAD	Indicates the city, central station, or customer number for the Secondary account is not accepted. The ID information was either entered incorrectly, or the central station failed to pre-authorize programmed ID numbers with AlarmNet customer service.
Registration BAD Pri&Sec – IDs BAD	Displayed when both primary and secondary subscriber IDs are invalid.

Registration BAD Pri ID – Need PIN	Displayed if this is a repair/replacement, or an error was made in programming the Primary account information of IGSMV for an existing account. This prompt appears for 2 seconds. See the *Replacing an existing module* section below for further displays.
Registration BAD 2nd ID – Need PIN	This prompt is displayed if this is a repair/replacement, or an error was made in programming the Secondary account information of IGSMV for an existing account. This prompt appears for 2 seconds. See the *Replacing an existing module* section below for further displays.
Registration BAD Pri&2nd – Need PIN	This prompt is displayed if this is a repair/replacement, or an error was made in programming BOTH the Primary and Secondary account information of IGSMV for an existing account. This prompt appears for 2 seconds. See the *Replacing an existing module* section below for further displays.

Replacing an existing module using the programming tool

Enter PIN#	This prompt appears after pressing the [Shift} and down arrow **[↓]** on the 7720P. **Note:** If it is necessary to exit registration mode, press ESC from the 7720P programming tool. Enter a 4-digit alphanumeric PIN number provided by your central station, your dealer or an authorized AlarmNet representative. Press the [Enter] key.
Registering …	The registration message is sent and the unit waits for acknowledgement.
Registration SUCCESS	If the PIN is valid, the new IGSMV is registered and the old unit unregistered. Additionally, AlarmNet sends a substitution alarm to the central station.
Registration BAD	If you entered an invalid PIN, the appropriate message is displayed depending on which account number is being replaced (see above for exact wording). The registration process is repeated. **NOTE:** Each attempt causes a substitution alarm to be sent to the central station.

Register by Phone

You can register the module by calling the AlarmNet Technical Assistance Center (TAC) at 1-800-222-6525. You will need the following information:

- MAC number (found on the label).
- Subscriber information (provided by the central station), including a city code, CSID, and a subscriber ID.
- When instructed to do so, triple-click the tamper switch to complete the registration.

Programmer Keyboard Commands

Programmer Keyboard Commands

Programmer keyboard commands can be used to quickly view your connectivity settings and options. Most commands require you to press the [Shift] key and then the designated command key. (See the keys designated in red on the 7720P Programming Tool.)

[A]

```
7845iGSM
x.x.xx          mm/dd/yy
```

Software Revision

"x.x.xx" indicates the installed software Revision.

Mm/dd/yy indicates month, day and year of the revision.

Module Identification Displays

[B]

```
MAC    xxxxxxxxxxxx
MAC CRC       yyyy
```

MAC Address

“xxxxxxxxxxxx” indicates the IGSMV's unique identification number.

"yyyy" indicates the MAC CRC number. This number is found on the label on the module, and a label on the box.

Press the [Space] key to go to the next field.

Press the backspace [BS] key to go to the previous field.

```
SCID   xxxxx  xxxxx
       xxxxx  xxxxx
```

SCID Display

Displays the identification number assigned to the SIM card (SCID) in this device.

Press the [Space] key to go to the next field.

Press the backspace [BS] key to go to the previous field.

```
IMEI   xxxxxxxx
       xxxxxx x
```

IMEI Display

Displays the identification number assigned to the IGSMV module in this device.

Press the [Space] key to get the MAC Address.

Press the backspace [BS] key to go to the previous field.

[C]

```
Mon 01 Jan 2001
05:48:39 am
```

Time

Retrieves the current date and time from the AlarmNet network in Greenwich Mean Time (GMT). This display confirms that the module is in sync with network.

[D]

```
Physical Link
Good/Bad
```

Network Diagnostics Display

Indicates whether the device has detected a physical connection to the internet.

Press the [Space] key to go to the next field.

```
NIC IP Address
xxx.xxx.xxx.xxx
```

IP Information Display

Displays the IP address assigned to this device.

Press the [Space] key to go to the next field.

Subnet Mask xxx.xxx.xxx.xxx	Displays the 32-bit address mask used to indicate the portion (bits) of the IP address that is being used for the subnet address. Press the [Space] key to go to the next field. Press the backspace [BS] key to go to the previous field.
Gateway IP Addr xxx.xxx.xxx.xxx	Displays the IP address assigned to the Gateway. Press the [Space] key to go to the next field. Press the backspace [BS] key to go to the previous field.
DNS Serv IP xxx.xxx.xxx.xxx	Displays the IP address assigned to the DNS (Domain Name System) server. Press the [Space] key to go to the next field. Press the backspace [BS] key to go to the previous field.
Encryption Test *AES* Passed!	Performs a self-test of the AES encryption algorithm. Press the [Space] key to go to the next field. Press the backspace [BS] key to go to the previous field.
DHCP OK	DHCP (Dynamic Host Configuration Protocol) indicates server is performing satisfactorily. Press the [Space] key to go to the Physical Link display.

GSM Status Displays

[E]

PriRSSI GPRS REG -xxxdbm x x	**GSM Status Display Screen 1** PriRSSI – Primary Site RSSI level in dBm. GPRS – GPRS Service availability where "x" can be: "Y" if GPRS is available "N" if GPRS is Not available REG – Registration status from radio module where "x" can be: N – Not Registered H – Registered Home S – Searching D – Registration Denied R – Registered Roaming ? – Unknown Registration State Press the [Space] key to go to the next screen. Press the backspace [BS] key to go to the last screen.
Cntry Netw LAC xxx xxx xxxxx	**GSM Status Display Screen 2** Cntry – Country Code Netw – Network Code LAC – Local area code Press the [Space] key to get to the next screen. Press the backspace [BS] key to go to the previous field.
Cell BaseSt Chan xxxxx x xxx	**GSM Status Display Screen 3** Cell – Base Station ID BaseSt – Base Station Antenna Sector Chan – Control Channel in use Press the [Space] key to go to the next screen. Press the backspace [BS] key to go to the previous field.
Second Site RSSI -xxxdbm	**GSM Status Display Screen 4** Secondary GSM Site RSSI level in dBm. Press the [Space] key to go to the GSM Status Display Screen 1. Press the backspace [BS] key to go to the previous field.

[F]

```
Testing Gateway
Redir 1
```

Run Network Diagnostic Test

Performs a set of network diagnostics that tests the integrity of the links between the IGSMV and the various connection points (Redirs) to AlarmNet. Refer to Section 6: *Network Diagnostics*.

System Status Displays

[S]

```
ECP  67  TmPB     Flt
     xx  5  ++    OK
```

ECP Mode

Displays the zone and system fault status.
Press the [Space] key to go to the next field.
Press the backspace [BS] key to go to the previous field.

```
1234 67 TmPB Flt
5555 xx  5  ++ OK
```

4204 Emulation Mode

Displays the zone and system fault status.
Press the [Space] key to go to the next field.
Press the backspace [BS] key to go to the previous field.

```
12345678 TmPB Flt
5555555x  5  ++ OK
```

Two-4204 Emulation Mode

Displays the zone and system fault status.
Press the [Space] key to go to the next field.
Press the backspace [BS] key to go to the previous field.

```
1234567 TmPB Flt
5555555  5   ++ OK
```

Zone Trigger Mode

The status of the IGSMV can be viewed on the 7720P. The status display includes:

- **Zone input status (1234567)** - the numbers 1-7 represent the 7 mappings of the zone input, and follow Honeywell's ADEMCO high-speed format codes:
  - **1** = New Event
  - **5** = Normal
  - **X** = Not Enabled
- **Tm** – Tamper status follows high-speed format codes above.
- **P** – Represents line voltage as follows:
  - **+** = Power line voltage OK
  - **–** = Power line voltage bad and reported
  - **V** = Power line voltage bad, not reported (reporting window not expired)
  - **^** = Power voltage restored, not yet reported
- **B** – Represents battery condition as follows:
  - + = Battery voltage acceptable
  - – = Battery voltage below 5.7V ±5%
- **Flt** – Represents radio faults:
  - **OK** = Normal ; No fault
  - **I** – No network connectivity over IP and fault time has expired
  - **i** – No network connectivity over IP and fault time has NOT yet expired.
  - **G** = No network connectivity over GSM and fault time has expired.
  - **g** = No network connectivity over GSM and fault time has NOT yet expired.

NOTE: The 7720P will not operate if the power line voltage is removed.

```
Bat NLd:  x.xxV
Bat Ld:     x.xxV
```

Battery Voltage Display

The voltage levels of the battery connected to the IGSMV can be viewed on the 7720P. The first line of the display shows the voltage level of the battery with no load.

The second line of the display shows loaded battery voltage. An asterisk (*****) next to the voltage indicates that this is below the accepted level.
Press the [Space] key to go to the next field.
Press the backspace [BS] key to go to the previous field.

	Battery Charger OK	**Battery Charger Status Display** The status of the battery charger circuit of the IGSMV can be viewed on the 7720P. The status is either OK or NOT OK. Press the [Space] key to go to the next field. Press the backspace [BS] key to go to the previous field.
	Line Voltage xx.xxV	**Line Voltage Display** The line voltage of the IGSMV can be viewed on the 7720P. An asterisk (*****) next to the voltage indicates that this is below the accepted level. Press the [Space] key to go back to the System Status Display. Press the backspace [BS] key to go to the previous field.
[T]	Test Msg Sent	**Test Alarm** Sends a Test alarm to AlarmNet. Functional for a *registered* IGSMV only. If the device is not registered, a message is displayed indicating that the command cannot be executed.
[X]	Reset CPU Y/N	**Reset the IGSMV.** Pressing [N] returns to diagnostic mode (blank screen = enter next command or escape). Pressing [Y] resets the module (blank screen = reset complete).
[↑] (UP arrow)	Registering …	**Registration** Registers a programmed IGSMV with AlarmNet.
[↓] (DN arrow)	Enter PIN#	**Registration with PIN for Replacement Module** Registers a replacement IGSMV with AlarmNet, once programmed, using the existing PIN #.
[0]	Force Server Update? Y/N	**Force Upload of Configuration File to Server** Pressing [Y] will force the device to upload its entire configuration file to the server. Pressing [N] cancels the operation. **NOTE:** If the internet is not available, and the IGSMV module is not initialized when you enter this command, the following screen will be displayed: Cannot Upload Try Later! _ Wait for the RSSI LEDs to light, indicating the IGSMV module has completed its initialization, and try again.
[ENTER]	Strt Prog Mode? Y/N_	**Enter Program Mode** Press [Y] to enter program mode; otherwise, press [N].

Network Diagnostics

Running Network Diagnostics on the IGSMV

The network diagnostic process tests the integrity of the links between the IGSMV and the various connection points of AlarmNet Control that are known as "Redirects" (Redirs or RDR).

To initiate the network diagnostics, press the [F] key on the 7720P Programming Tool.

NOTE: The test is performed ONLY if a physical link is detected. If no physical link is detected, the test is aborted and the following is displayed:

NO PHYSICAL LINK

If a physical link is detected, the diagnostics are performed. The following shows the progression of the test:

Testing Redir 1	The first step of the test traces the connection to Redir 1 at AlarmNet Control.
Testing Redir 2 Reached Gateway	A successful trace to Redir 1 is indicated here. See below for possible errors that may occur at this stage of testing.
Redir 1 Service OK	The service at AlarmNet Control on Redir 1 is functioning. See below for possible errors that may occur at this stage of testing.
Testing Redir 2	The first step of the test traces the connection to Redir 2 at AlarmNet Control.
Redir 2 Service OK	The service at AlarmNet Control on Redir 2 is functioning. See below for possible errors that may occur at this stage of testing.
Testing Redir 3	The first step of the test traces the connection to Redir 3 at AlarmNet Control.
Redir 3 Service OK	The service at AlarmNet Control on Redir 3 is functioning. See below for possible errors that may occur at this stage of testing.
RDR1 RDR2 RDR3 OK OK OK	A summary of the tests is displayed after Redir 3 is tested. The example shows that the tests of all three connection points, or Redirs, were successful. If an error occurred at any point, the summary will display "FAIL" under the faulty Redir.

Possible Errors Running Network Diagnostics

Errors may occur either while tracing the connection to a given Redir or while testing the service at a given Redir. The following list highlights the most common errors. Please contact the AlarmNet Technical Assistance Center (TAC) for help regarding any errors NOT listed below:

Possible Errors

Testing Redir *x* FAIL before Gtwy	While tracing the connection to Redir x, the trace fails before ever reaching the local gateway (router).
Testing Redir *x* FAIL at Gtwy	While tracing the connection to Redir x, the trace fails after reaching the local gateway (router).
Testing Redir *x* FAIL at Pvt IP	While tracing the connection to Redir x, the trace fails after reaching the private IP.
Testing Redir *x* FAIL on IP Addr	While tracing the connection to Redir x, the trace fails after reaching the public IP.
Redir *x* ERR:Proxy 18	After a successful trace to Redir x, the test of the network service timed out without a response.

Appendix A: Summary of LED Operation

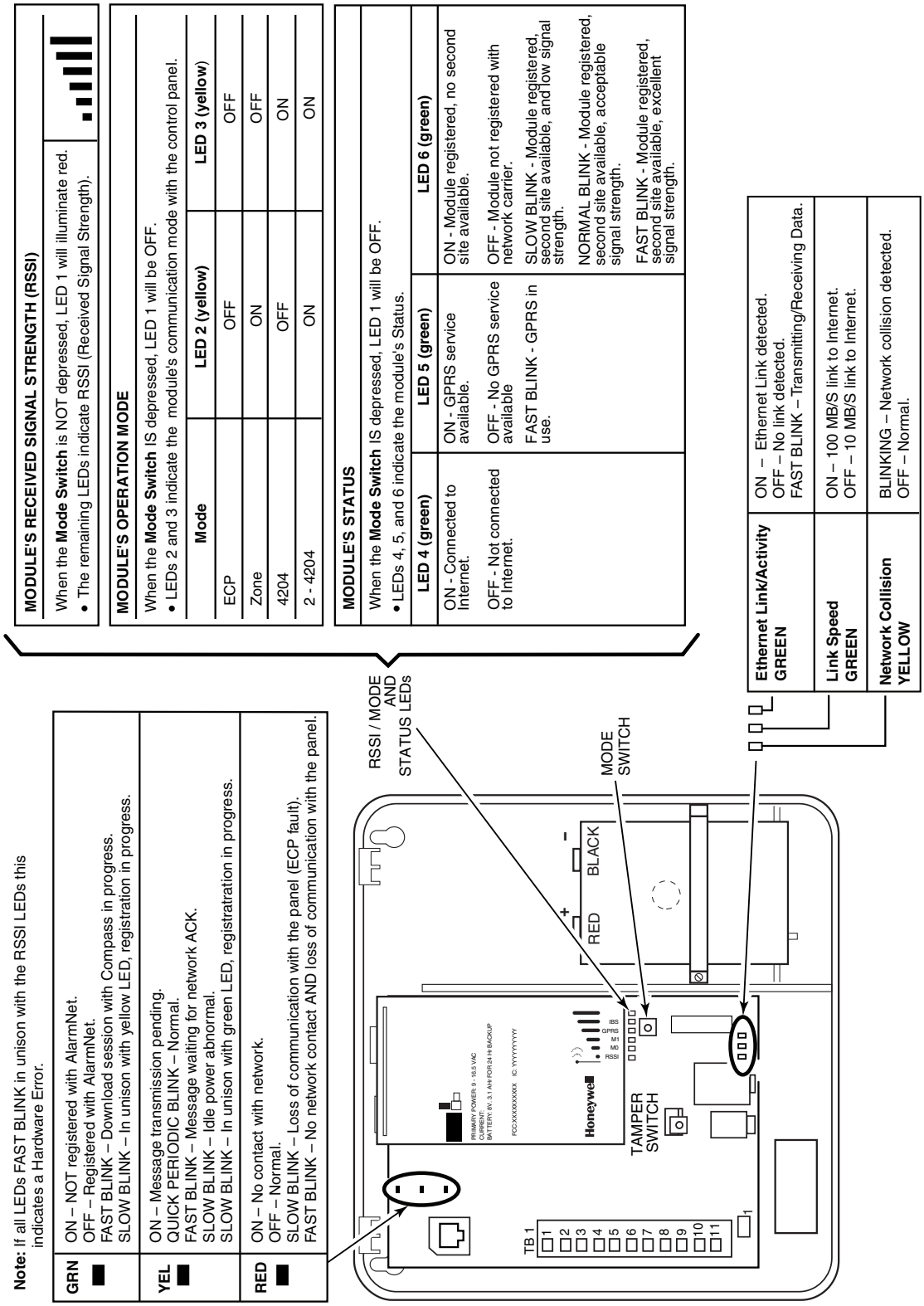

Appendix B: Central Station Messages

Alarm Condition	ECP Mode		Zone and 4204 Modes	
	Alarm Code	Restore Code	Alarm Code	Restore Code
Power On / Reset	E339 C08xx*		5551 5555 6	
Tamper **(Compromise Indication)**	E341 C08xx*	R341 C08xx*	5555 5551 7	5555 5553 7
Power Loss	E337 C08xx*	R337 C08xx*	1555 5555 6	3555 5555 6
Low Battery	E338 C08xx*	R338 C08xx*	5155 5555 6	5355 5555 6
Battery Charger Failure	E314 C08xx*	R314 C08xx*	5155 5555 1	5355 5555 1
ECP Supervision **(Compromise Indication)**	E355 C0000	R355 C0000	5555 5515 5	5555 5535 5
Communication Path Supervision		R350 C0951		5555 5553 5
Telco **(Compromise Indication)**			5555 5155 6	5555 5355 6
Open/Close			2 sent in selected zone	4 sent in selected zone
Test	5555 5555 9		5555 5555 9	
Specific to RESIDENTIAL / COMMERCIAL Control Panels (Such as the VISTA-10P, 15P, and 20P series.)				
UL The information provided in this section for the VISTA-10P, 15P, and 20P series control panels has not been evaluated with this communications module.				
Communicator Trouble (low battery, ECP buss, network) **(Possible Compromise Indication)**	E353 C08xx* ◊	R353 C08xx* ‡		
Radio Fault	E353 0 1xx* ‡	R353 0 1xx* ‡		
Specific to COMMERCIAL Control Panels (Such as the VISTA-128/250 series.)				
Communicator Trouble (low battery, ECP buss, network) **(Possible Compromise Indication)**	E333 C08xx* ‡	R333 C08xx* ‡		
Radio Loss of Signal **(Possible Compromise Indication)**	E357 0 8xx* †	R357 0 8xx* ‡ or R380 0 8xx* ‡		
Radio Fault (low battery, tamper, ECP Buss)	E333 0 8xx* ‡	R333 0 8xx* ‡		
AlarmNet Messages				
Communication failure. **(Possible Compromise Indication)**	5555 1555 6	5555 3555 6		
Authorized Radio Substitution	00D0 010C 0			
Unauthorized Radio Substitution Attempt	00D0 010E 0			
Service Termination	00D0 020E 0			

* xx = IGSMV Device Address

† = Message is sent by dialer only.

‡ = Message is sent by dialer and radio.

◊ = Message is sent by dialer only, or dialer and radio, depending on failure.

Appendix C: IP Downloading

General Information

The IGSMV can be used to provide high-speed up/downloading to Honeywell VISTA control panels. This allows site maintenance independent of central station monitoring, and modification to sites globally via the internet. At this time, some control panels support Direct Wire downloading and some control panels support downloading through the ECP bus. Residential control panels that support IP downloading (e.g., VISTA-20P) are connected to the IGSMV through the ECP bus. Currently, commercial controls such as VISTA-128BP and FBP support IP downloading through use of a Direct Wire connection (using the trigger cable).

UL Downloading may only be performed if a technician is at the site.

Direct Wire Setup

To perform IP up/downloading using Direct Wire, the IGSMV requires that Direct Wire Downloading over IP programming is enabled (Direct Wire Y/N), and that the ECP device address on which the IGSMV communicates with the control panel as a keypad is entered (Keypad Address). Additionally, the IGSMV must be connected by cable as shown below to the control panels listed.

NOTES:

1. For Direct Wire IP downloading on Commercial Fire panels (e.g. VISTA-128FBP, FA1700C), Program Field 3✱19 **Enable J2 Header Printer Port** must be set to "**1**".
2. This feature is not available if device is set for zone trigger mode.

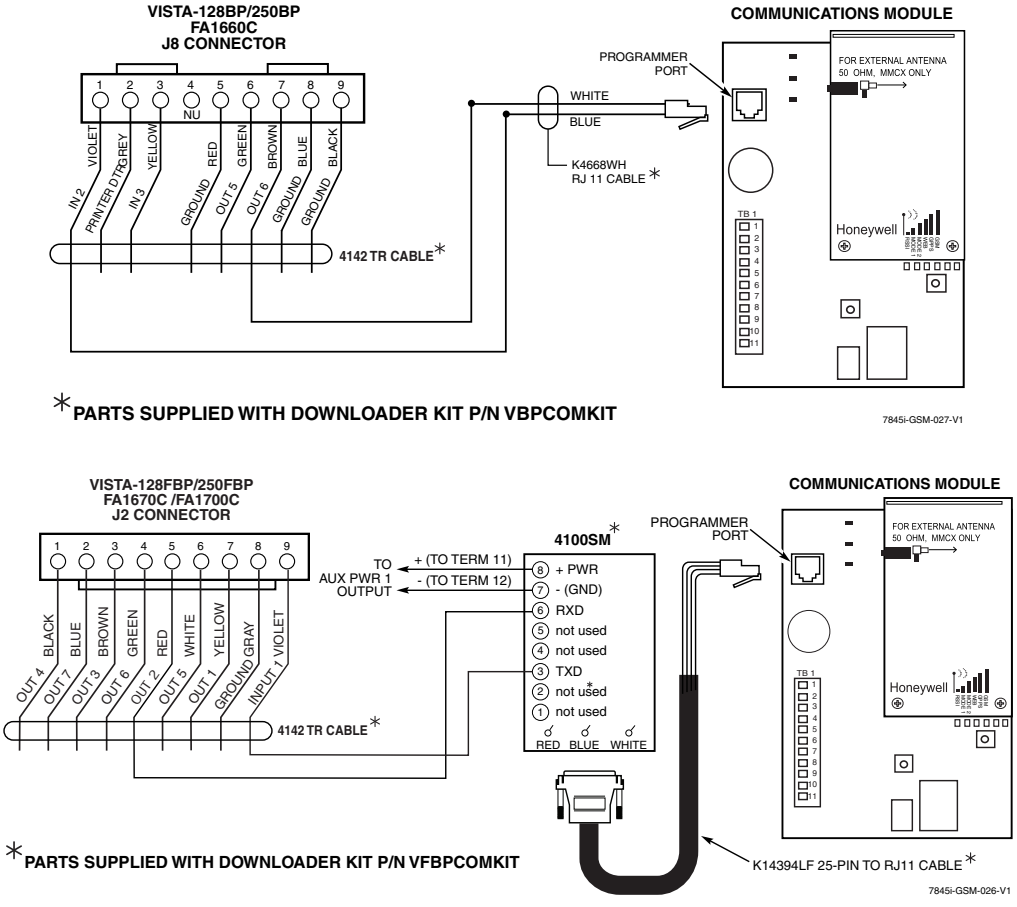

Figure C-1. Cable Connections for IP Downloading

Appendix D: Glossary

AES	Advanced Encryption Standard
DACT	Digital Automated Communications Terminal
DHCP	Dynamic Host Configuration Protocol, which provides a mechanism for allocating IP addresses dynamically so that addresses can be reused when hosts no longer need them.
DNS	Domain Name System, which is a distributed hierarchical naming system used to resolve domain names (e.g., www.yahoo.com) into numerical IP addresses (e.g., 204.17.25.1.).
DSL	Digital Subscriber Line.
ECP	Enhanced Console Protocol, which is a proprietary bus used in Honeywell control panels to communicate with keypads and peripheral devices. It uses four wires; power, ground, data in, data out.
Gateway IP Address	A gateway (sometimes called a router) is a computer and/or software used to connect two or more networks (including incompatible networks) and translates information from one network to the other. The Gateway IP address is the IP address for the gateway.
GPRS	General Packet Radio Service.
GSM	Global System for Mobile communications, which is an international standard for digital mobile phone systems used for cellular communication.
IMEI	International Mobile Equipment Identity number.
IP	Internet Protocol.
IP Address	A unique number consisting of four parts separated by periods (for example: 204.17.29.11). An IP Address can be fixed or "static", or "dynamic," where the IP Address is assigned via DHCP at every startup.
ISDN	Integrated Services Digital Network.
ISP	Internet Service Provider.
LAN	Local Area Network.
MAC ID	Media Access Code, this is a unique address assigned to every network communications device. For the communications module it is located on the module label, and on the box.
Subnet Mask	A Subnet is a portion of a network that shares a network address with other portions of the network, and is distinguished by a subnet number. The Subnet Mask is a 32-bit address mask used in IP to indicate the bits of an IP address that are being used for the subnet address.
TCP/IP	Transmission Control Protocol / Internet protocol.

NOTES:

NOTES:

IGSMV Summary of Connections

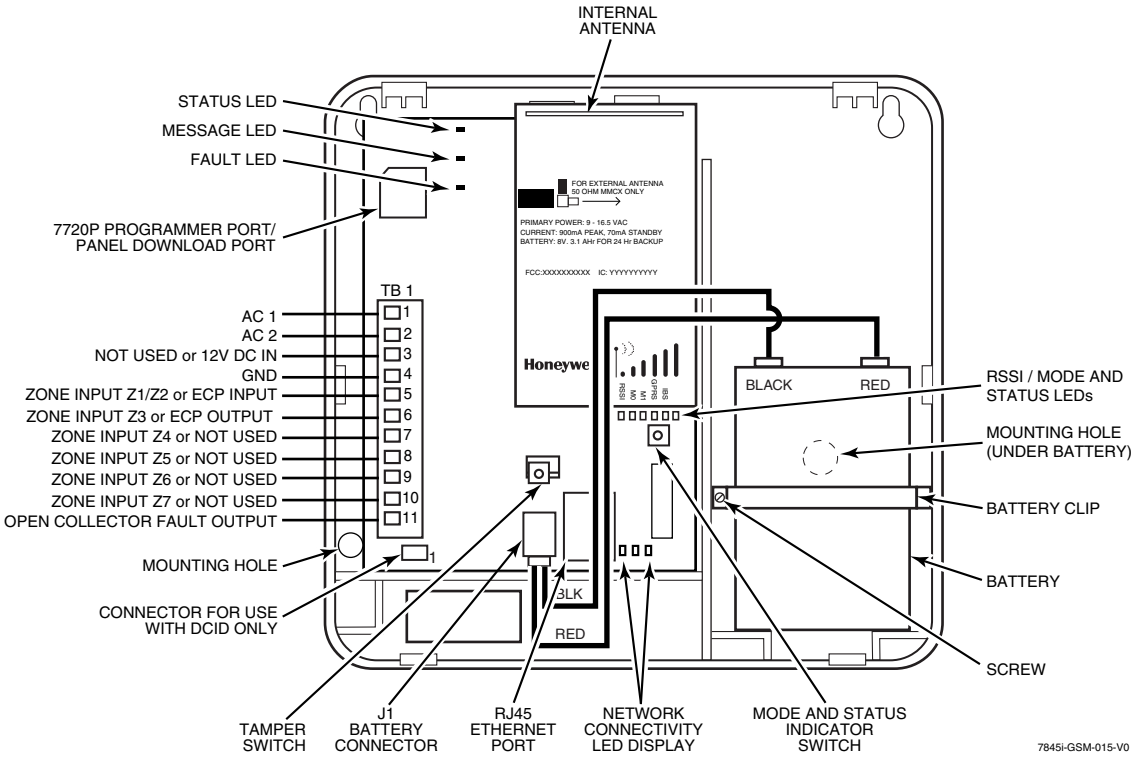

TB1 Wiring for IGSMV Cellular Communicator

TB1	ECP Mode	Zone Trigger Mode	4204 Mode	2 x 4204 Mode
1	AC 1	AC 1	AC 1	AC 1
2	AC 2	AC 2	AC 2	AC 2
3	ECP V+ (RED)	NOT USED	ECP V+ (RED)	ECP V (RED)+
4	GND (BLK)	GND (BLK)	GND (BLK)	GND (BLK)
5	ECP IN (YEL)	Z1/Z2	ECP IN (YEL)	ECP IN (YEL)
6	ECP OUT (GRN)	Z3	ECP OUT (GRN)	ECP OUT (GRN)
7	NOT USED	Z4	NOT USED	NOT USED
8	NOT USED	Z5	NOT USED	NOT USED
9	Z6	Z6	Z6	NOT USED
10	Z7	Z7	Z7	NOT USED
11	FLT OUT	FLT OUT	FLT OUT	FLT OUT

FEDERAL COMMUNICATIONS COMMISSION (FCC) STATEMENTS

The user shall not make any changes or modifications to the equipment unless authorized by the Installation Instructions or User's Manual. Unauthorized changes or modifications could void the user's authority to operate the equipment.

CLASS B DIGITAL DEVICE STATEMENT

NOTE: This equipment has been tested and found to comply with the limits for a Class B digital device, pursuant to part 15 of the FCC Rules. These limits are designed to provide reasonable protection against harmful interference in a residential installation. This equipment generates, uses and can radiate radio frequency energy and, if not installed and used in accordance with the instructions, may cause harmful interference to radio communications. However, there is no guarantee that interference will not occur in a particular installation. If this equipment does cause harmful interference to radio or television reception, which can be determined by turning the equipment off and on, the user is encouraged to try to correct the interference by one or more of the following measures:

- Reorient or relocate the receiving antenna.
- Increase the separation between the equipment and receiver.
- Connect the equipment into an outlet on a circuit different from that to which the receiver is connected.
- Consult the dealer or an experienced radio/TV technician for help.

This Class B digital apparatus complies with Canadian ICES-003.

Cet appareil numérique de la classe B est conforme à la norme NMB-003 du Canada.

INDUSTRY CANADA (IC) STATEMENTS

This device complies with RSS210 of Industry Canada. Operation is subject to the following two conditions: (1) This device may not cause harmful interference, and (2) This device must accept any interference received, including interference that may cause undesired operation.

Cet appareil est conforme à la partie 15 des règles de la FCC & de RSS 210 des Industries Canada. Son fonctionnement est soumis aux conditions suivantes: (1) Cet appareil ne doit pas causer d' interferences nuisibles. (2) Cet appareil doit accepter toute interference reçue y compris les interferences causant une reception indésirable.

DOCUMENTATION AND ONLINE SUPPORT

For the latest documentation and online support information, please go to:
http://www.security.honeywell.com/hsc/resources/MyWebTech/

WARRANTY

For the latest warranty information, please go to:
http://www.security.honeywell.com/hsc/resources/wa/

Honeywell

2 Corporate Center Drive, Suite 100
P.O. Box 9040, Melville, NY 11747
Copyright © 2011 Honeywell International Inc.

www.security.honeywell.com

800-07801V1 2//11 Rev. A