PTZ-T4225I-D(E)
2 MP IR Turbo 4-Inch Speed Dome





HiLook PTZ-T4225I-D(E) IR Turbo 4-Inch Speed Dome is able to capture high quality images in poor light environment. The black anti-reflective glass increases the luminousness which helps IR distance reach up to 100 m.

The embedded CMOS chip makes WDR, and real-time 1920 × 1080 resolution possible. With the help of the 25× optical zoom, and IR cut filter, the camera offers more details over an expansive area.

- 1/2.8" HD progressive scan CMOS
- 1920 × 1080 resolution
- 25× optical zoom, 16× digital zoom
- 120 dB true WDR (Wide Dynamic Range)
- Up to 100 m IR distance
- 3D intelligent positioning
- Switchable TVI/AHD/CVI video outputs

Specification

Camera	
Model	PTZ-T4225I-D(E)
Image Sensor	1/2.8" progressive scan CMOS
Max. Image Resolution	1920 × 1080
Frame Rate	50Hz: 25fps @(1920 × 1080) 60Hz: 30fps @(1920 × 1080)
Min. Illumination	Color: 0.005 Lux @(F1.6, AGC ON) B/W: 0.001 Lux @(F1.6, AGC ON) 0 lux with IR
White Balance	Auto/Hauto/Manual/ATW/Indoor/Outdoor
AGC	Auto/Manual
DNR	3D DNR
WDR	≥ 120 dB
Shutter Time	PAL: 1/1 s to 1/10,000 s NTSC: 1/1 s to 1/10,000 s
Day & Night	IR cut filter
Digital Zoom	16 ×
Privacy Mask	8 programmable privacy masks
BLC (Backlight Compensation)	Yes
HLC (highlight Compensation)	Yes
EIS (Electric Image Stabilization)	Yes
Reginal Focus	Yes
Lens	
Focus Mode	Auto/Semiauto/Manual
Focal Length	4.8 mm to 120 mm, 25 × Optical
Aperture Range	F 1.6 to F 3.5
Horizontal Field of View	57.6° to 2.5° (wide to tele)
Min. Working Distance	10 mm to 1500 mm (wide to tele)
Zoom Speed	Approx. 3.2 s (optical, wide to tele)
Pan and Tilt	
Pan Range	360° endless
Pan Speed	Pan manual speed: 0.1° to 80°/s Pan preset speed: 80°/s
Tilt Range	-15° to 90° (auto flip)
Tilt Speed	Tilt manual speed: 0.1° to 80°/s Tilt preset speed: 80°/s
Proportional Zoom	Rotation speed can be adjusted automatically according to zoom multiples
Presets	256
Patrol	10 patrols, up to 32 presets per patrol
Pattern	5 patterns, with the total recording time no less than 10 minutes
Power-off Memory	Yes
Park Action	Preset/Patrol/Pattern/Pan Scan/Tilt Scan/Panorama Scan/Day Mode/Night Mode/None
PTZ Position Display	ON/OFF
Preset Freezing	Yes

Scheduled Task	Preset/Patrol/Pattern/Pan Scan/Tilt Scan/Panorama Scan/Day Mode/Night Mode/Zero Calibration/None
Infrared	
IR Distance	Up to 100 m
IR Intensity	Automatically adjusted depending on the zoom ratio
Input/Output	
Video Output	Switchable TVI/AHD/CVI video output, (NTSC or PAL composite, BNC)
RS-485 Interface	Half-duplex mode Self-adaptive HIKVISION, Pelco-P, Pelco-D protocol
UTC function	UTC protocol (or HIKVISION-C protocol in previous DVR)
General	
Menu Language	English
Power	12 VDC Max.20 W (IR: 7 W)
Working Temperature	-30° C to 65° C (-22° F to 149° F)
Working Humidity	90% or less
Protection Level	IP66 standard (outdoor dome) TVS 4,000 V lightning protection, surge protection and voltage transient protection
Mounting	Various mounting modes optional
Dimension	Ø 165.9 mm × 290 mm (Ø 6.5" × 11.4")
Weight (approx.)	2 kg (4.41 lb.)

Order Model

PTZ-T4225I-D(E)

Dimension

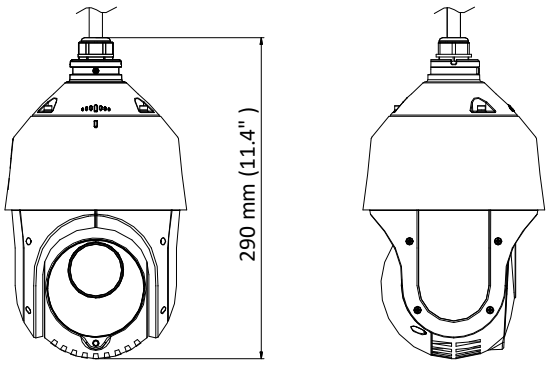

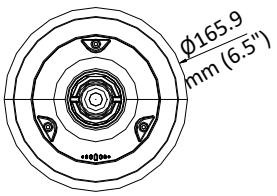

Accessory

Included



DS-1618ZJ
Wall mount (short arm)



DS-1661ZJ
Pendant mount



DS-1662ZJ
Pendant mount



DS-1663ZJ
Ceiling Mount



DS-1660ZJ
Parapet wall mount



Wall Mount with Junction box



DS-1604ZJ-POLE
Vertical Pole Mount



DS-1604ZJ-BOX-CORNER
Corner Mount



DS-1604ZJ-BOX
Wall mount
whit junction box



DS-1602ZJ-BOX-CORNER
Wall mount
whit junction box



DS-1619ZJ
Parapet wall mount

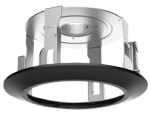

DS-1671ZJ-SDM9
Ceiling Mount