DS-1704ZJ-Y

Wall Mount for Explosion-Proof Bullet Camera



Feature

- Adjustable tilt angle from -45° to 45°, and pan angle from -45° to 45°
- The cable hole design facilitates the cable routing

Dimension

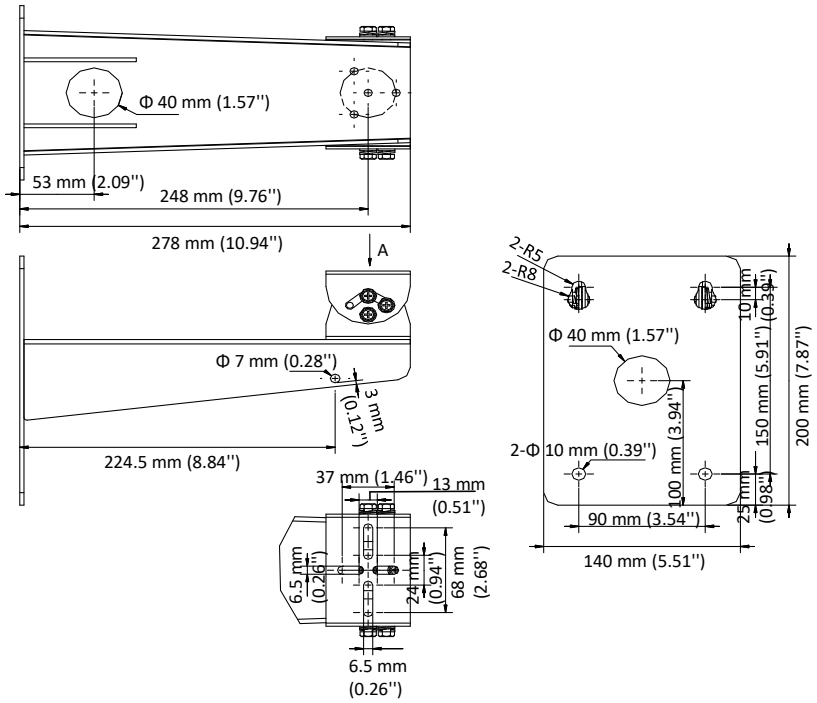

Available Model

DS-1704ZJ-Y

Parameter

Model / Parameters	DS-1704ZJ-Y
	Wall Mount for Explosion-Proof Bullet Camera
Appearance	Stainless Steel
Material	SUS316L
Dimension	140 mm × 200 mm × 278 mm (5.51" × 7.87" × 10.94")
Weight	Approx. 2158 g (4.76 lb.)

Note

- The mount should be installed on a flat surface.
- Waterproof rubber is necessary for the outdoor application.
- The wall should be capable of supporting at least 8 times as much as the total weight of the camera, and the mount.
- The maximum load capacity of the mount is 8 kg (17.64 lb.).