TS2200 Pro series

Streamline Traffic Flow With Our
Dual Lane Tripod Turnstile



TS2200 Pro series is mainly made of SUS304 stainless steel which boosts up durability. Its compact design provides a space-saving and cost-efficient solution in multiple scenarios, such as corporate offices and theme parks.

The turnstile can integrate with the access control system and has RFID verification, fingerprint verification, QR code and palm reader, improving access security.

The built-in LED pictogram provides user a clear directional guidance. In case of emergency, the bi-directional tripod turnstile supports wireless remote control to execute the drop arm function efficiently for free passage.



Access Control System

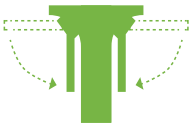

Drop Arm



Bi-directional

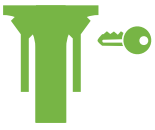

Mechanical Unlocking

Features

- SUS304 stainless steel housing
- Bi-directional and dual lane tripod turnstile with drop arm function
- LED pictogram for intuitive use
- High throughput rate
- Easy and simple installation process

Specifications

Model	TS2200 Pro	
Power Requirements	AC110V/220V, 50/60Hz	
Power Consumption	Running : 40W	Standby : 10W
Operating Temperature	-28°C to 60°C	
Operating Humidity	5% to 80% RH (non-condensing)	
Operating Environment	Indoor/Outdoor (semi-enclosed)	
Speed of Throughput	Maximum 25/minute	
Lane Width	550 mm	
Arm Length	500mm	
Footprint	1120* 350mm	
Dimension(L*W*H)	1337* 1130* 900mm	
Package Dimension(L*W*H)	470* 1220* 1100mm	
Net Weight	65kg	
Gross Weight with Package	75kg	
LED Pictogram Indication	Yes	
Control System	Input controlled by dry contact	
Cabinet Material	SUS304	
Lid Material	SUS304	
Barrier Material	SUS304	
Barrier Movement	Rotated	
Emergency Mode	Support drop arm function (power off drop arm)	
Security Level	Medium	
MCBF	2 millions	
Options/Accessories	Remote control, QR reader	
Certitications	CE FCC and UKCA	

Dimensions (mm)

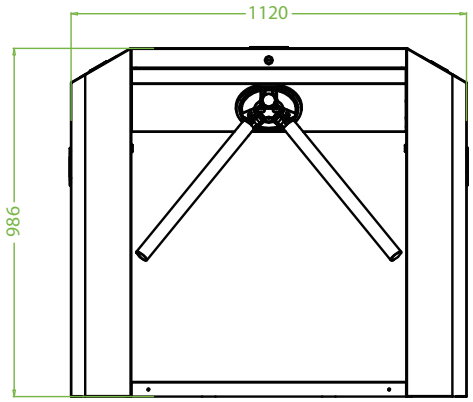

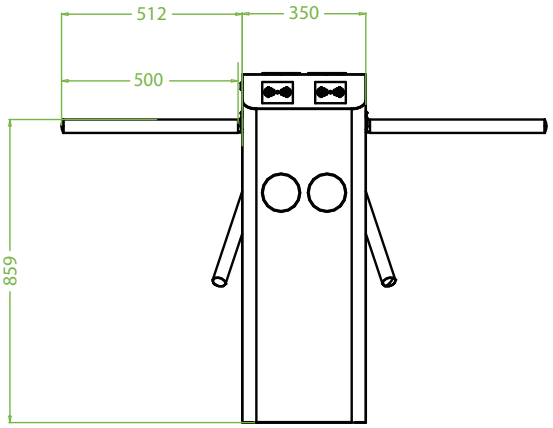

Copyright © 2023 ZKTECO CO., LTD. All rights reserved.