Translated from Spanish to English - www.onlinedoctranslator.com

ZKTeco

Mobile Stand Installation Guide

Version: 1.1

· To ensure correct and safe use, please read carefully this manual before installation.

· It is recommended to equip this model with a 55 to 86 inch interactive whiteboard.

· The maximum weight of the bearing can support up to 100 kg.

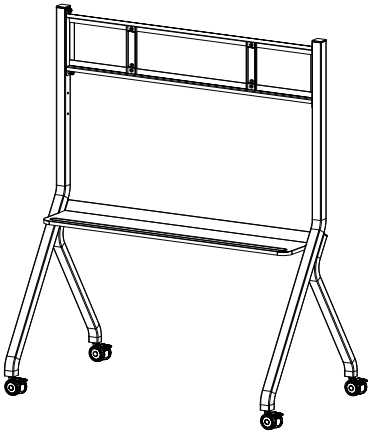

Packing list

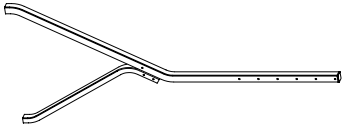

A - Left bracket 1 piece



C - Wall bracket 1 piece



E - Wheels 4 pieces

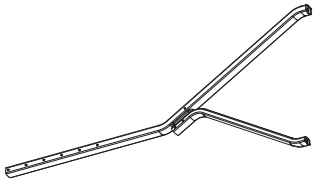

B - Right bracket 1 piece



D - Tray 1pc



F - Bar for hanging on the wall 2 pieces*

Cross Slotted Recessed Hex Head Screw	M8×25mm	14 pieces	
Spring cushion M12	Ø20×Ø13mm	4 pieces	
M6 screw*	M6×130mm	2 pieces	
Phillips Screwdriver (User Prepared)		1 pc	
Adjustable Wrench (Prepared by user)		1 pc	

Note: "*" Indicates that due to differences in models, some models include this accessory, please refer to the current one.

Installation steps

Step 1

Adjust the wheel to the brake state and screw it into the brackets (as Figure 1).

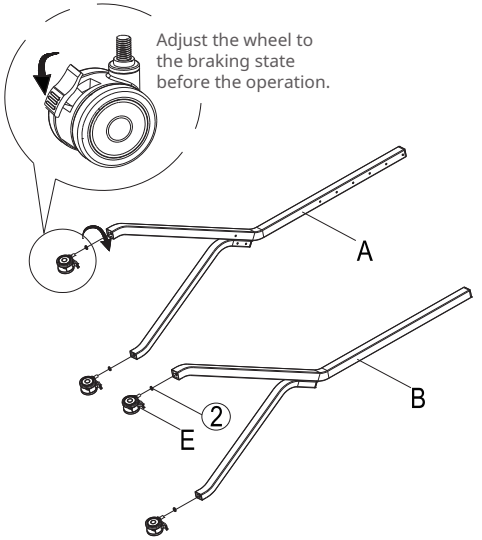

Figure 1

Step 2

Attach the Wall Bracket to the Left Bracket (as Figure 2), 3 sets of mounting heights (1 & 4, 2 & 5, 3 & 6), optional on demand.

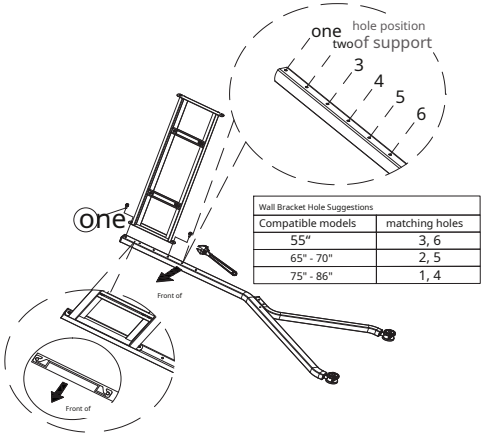

Wall Bracket Hole Suggestions	
Compatible models	matching holes
55"	3, 6
65" - 70"	2, 5
75" - 86"	1, 4

Figure 2

Step 3

Attach the right bracket to the other end of the bracket. wall (as shown in Figure 3).

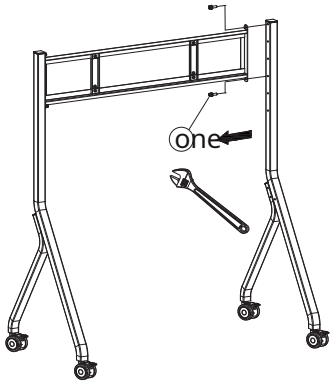

figure 3

Step 4

Installing the tray between the two supports (as in Figure 4).

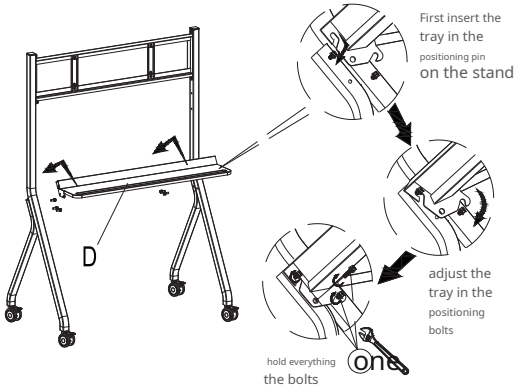

Figure 4

step 5

Attach the wall hanger bar to the entire machine as required.

necessary (as shown in Figure 5).

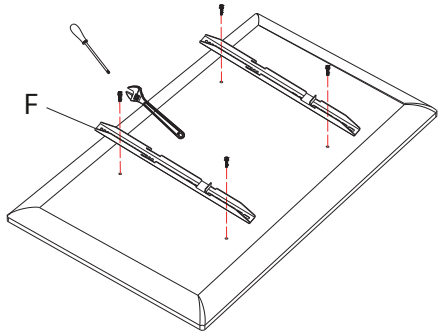

Figure 5

step 6

Hang the complete assembled machine on the wall bracket and lock the safety screw on the

Bar to hang on the wall (as in Figure 6).

Make sure the brakes are locked, this step requires at least 2 professionals to complete.

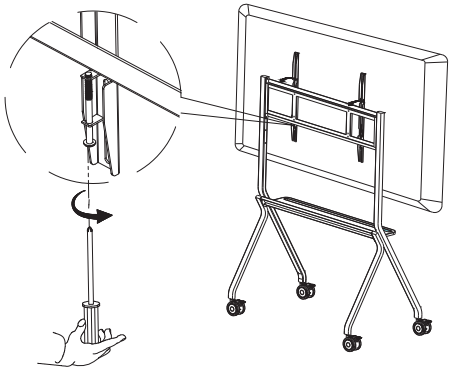

Figure 6

step 7

Please refer to the following image to see the finished product.

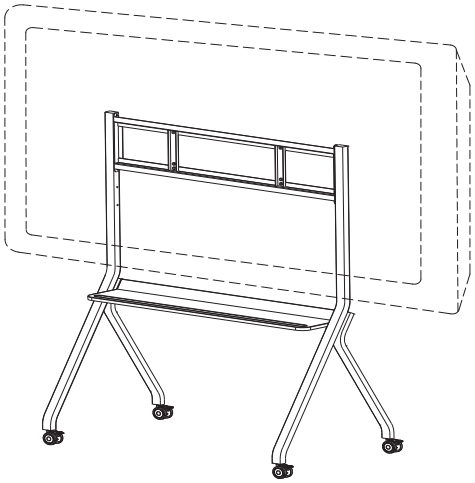

OBSERVATIONS:

When the interactive whiteboard with its own hanging bar cannot be effectively combined with the tripod, you need to modify it together with the wall mount plate as shown below.

one Attach the wall mount plate to the wall bracket.

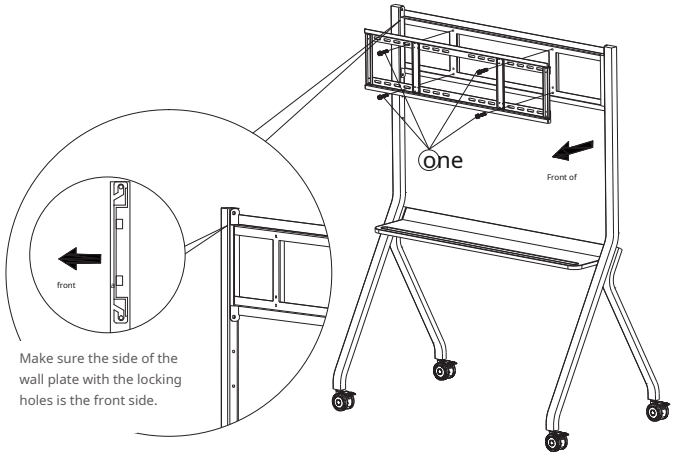

tw Hang the interactive whiteboard on the wall mount plate and lock the safety pin.

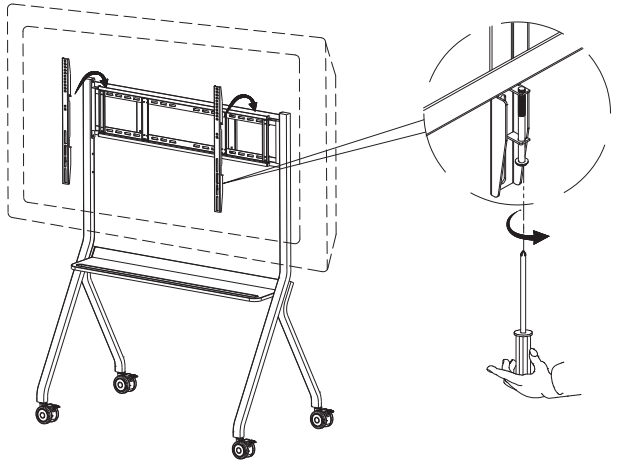

ZKTECO CO.,LTD. www.zkteco.comCopyright © 2020 ZKTECO CO., LTD. All rights reserved.

ZKTeco Industrial Park, No. 32, Industrial Road, Tangxia City, Dongguan, China. Telephone: +86 769 - 82109991 Fax: +86 755 - 89602394