Protect Viewport

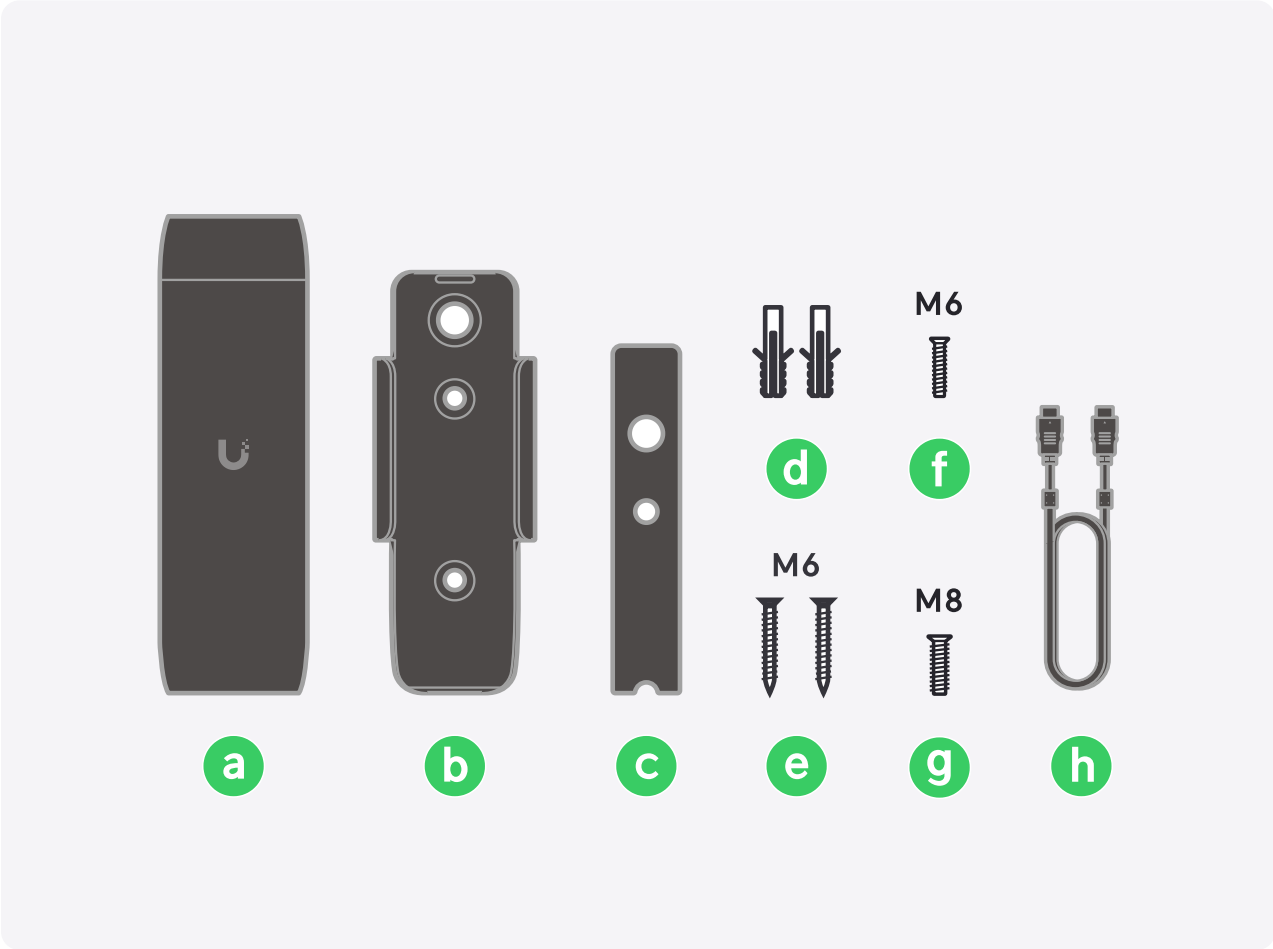

1

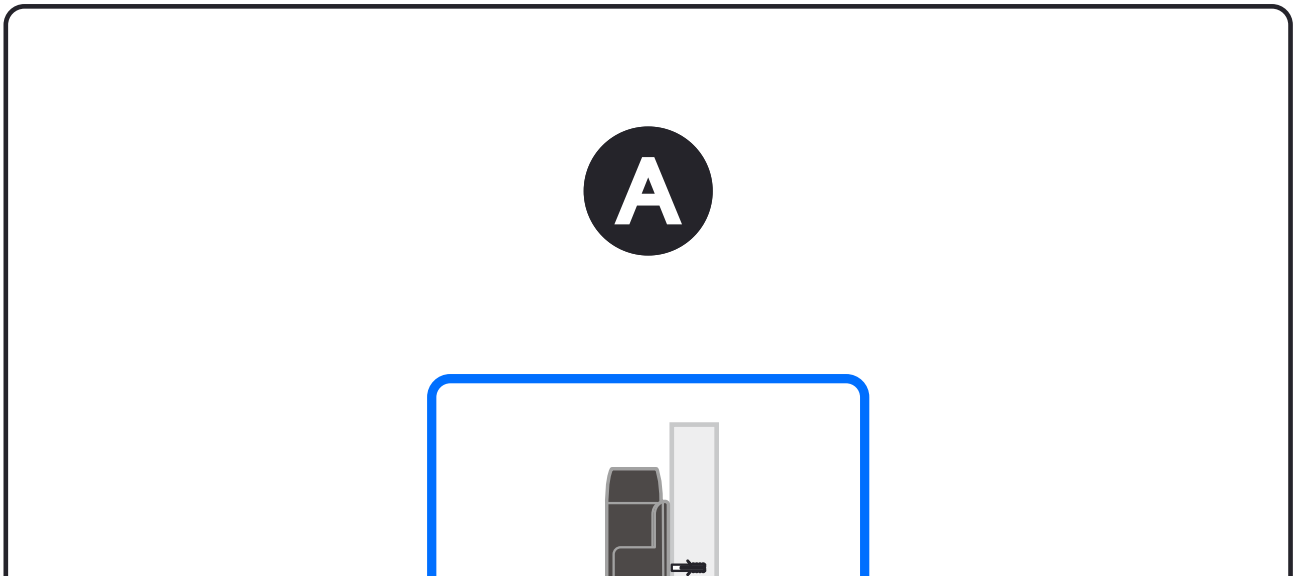

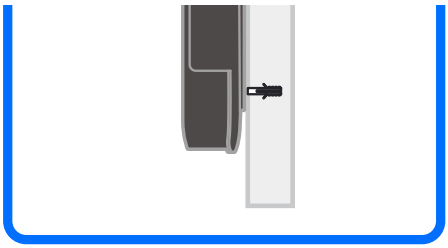

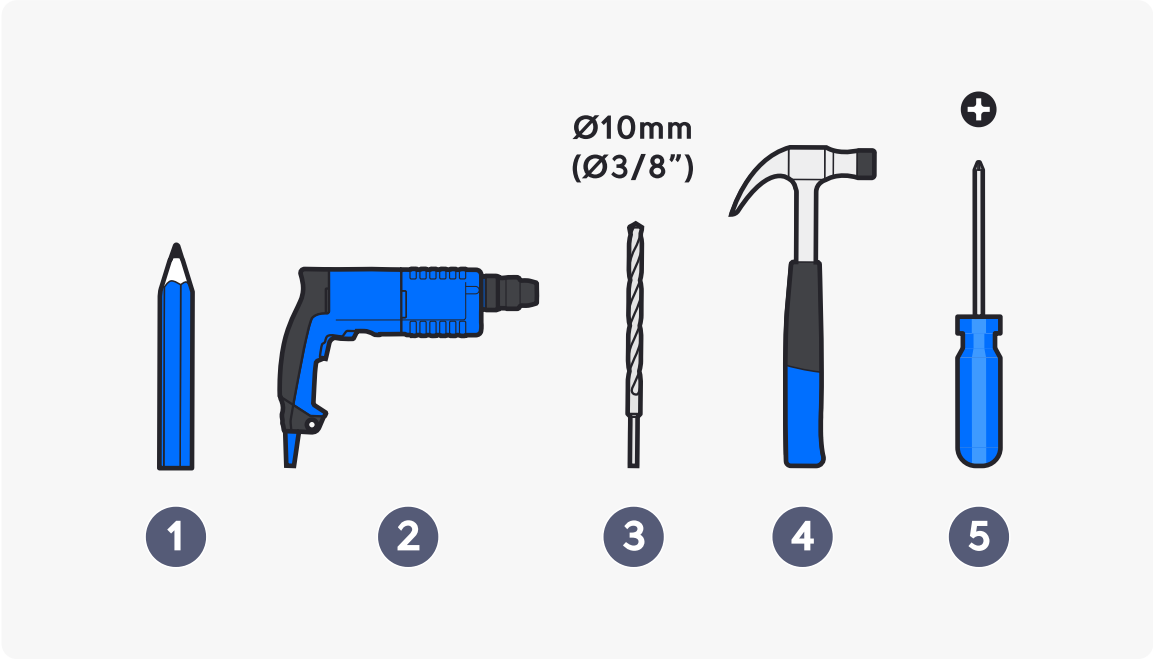
Ø10mm
(Ø3/8")
1
2
3
4
5

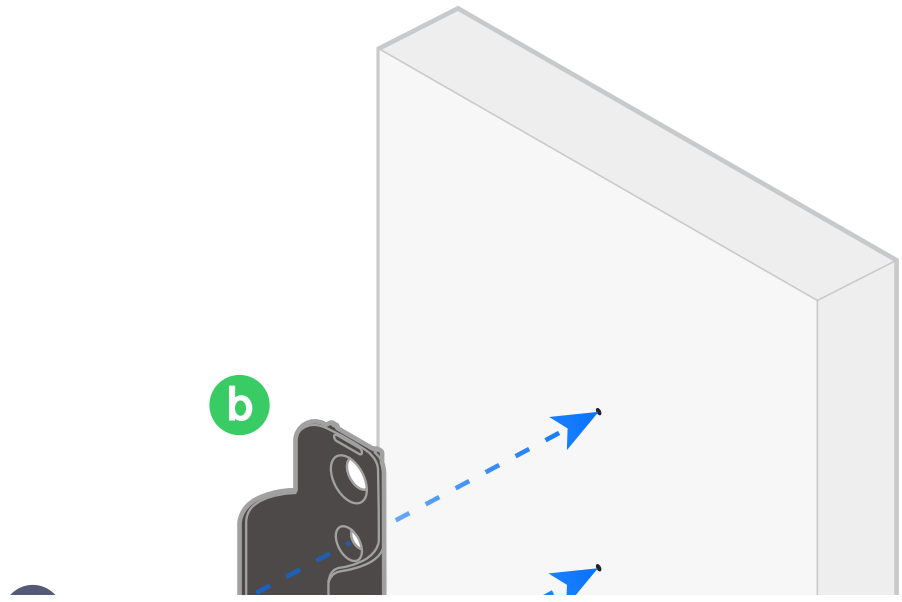
b

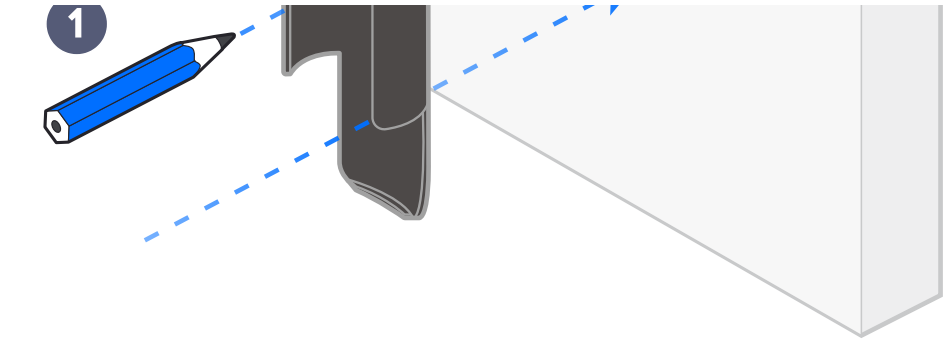
1

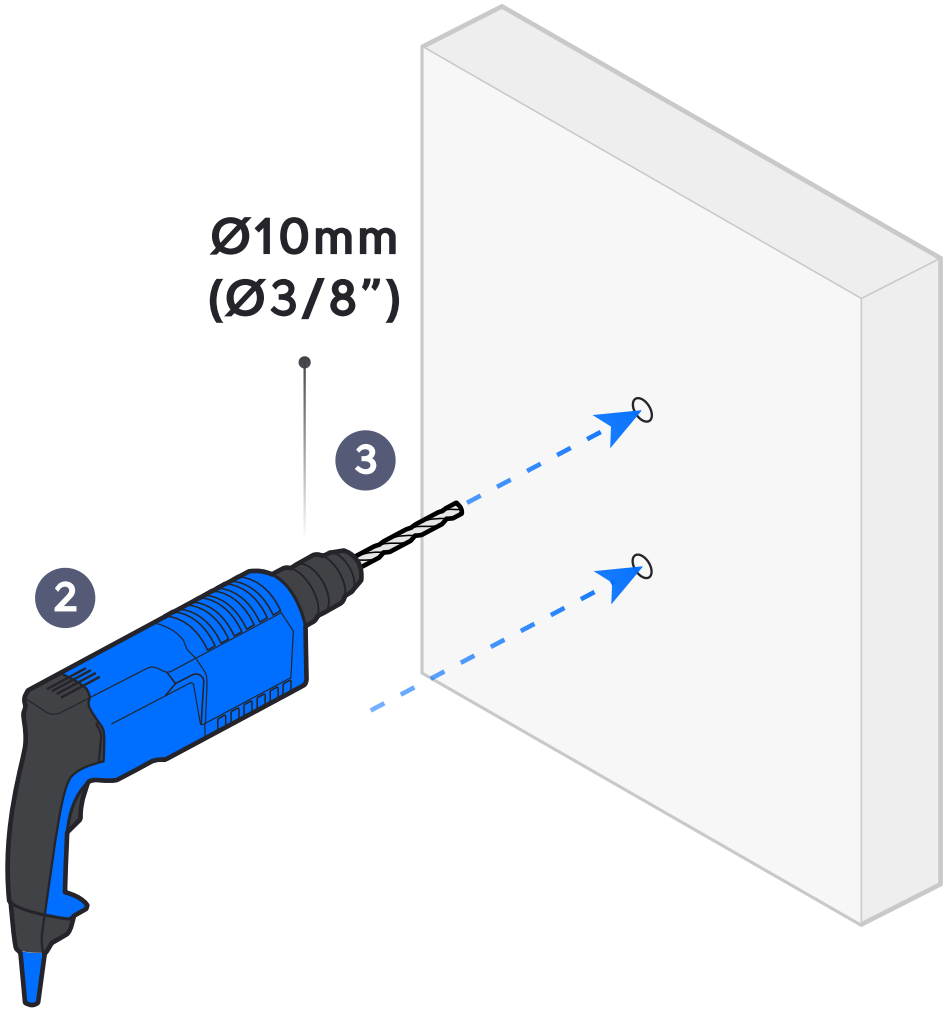
Ø10mm
(Ø3/8”)
3
2

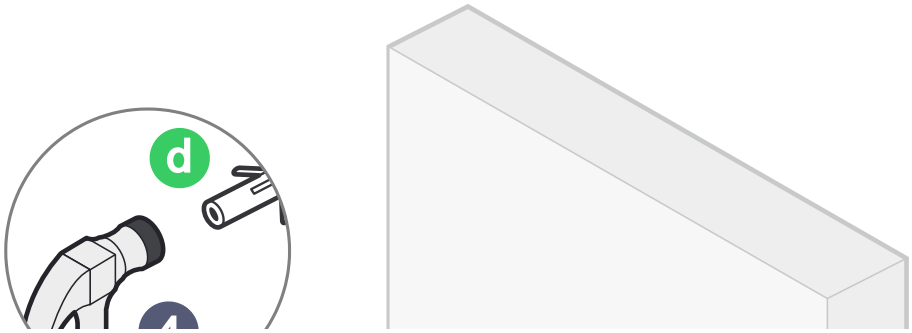
d

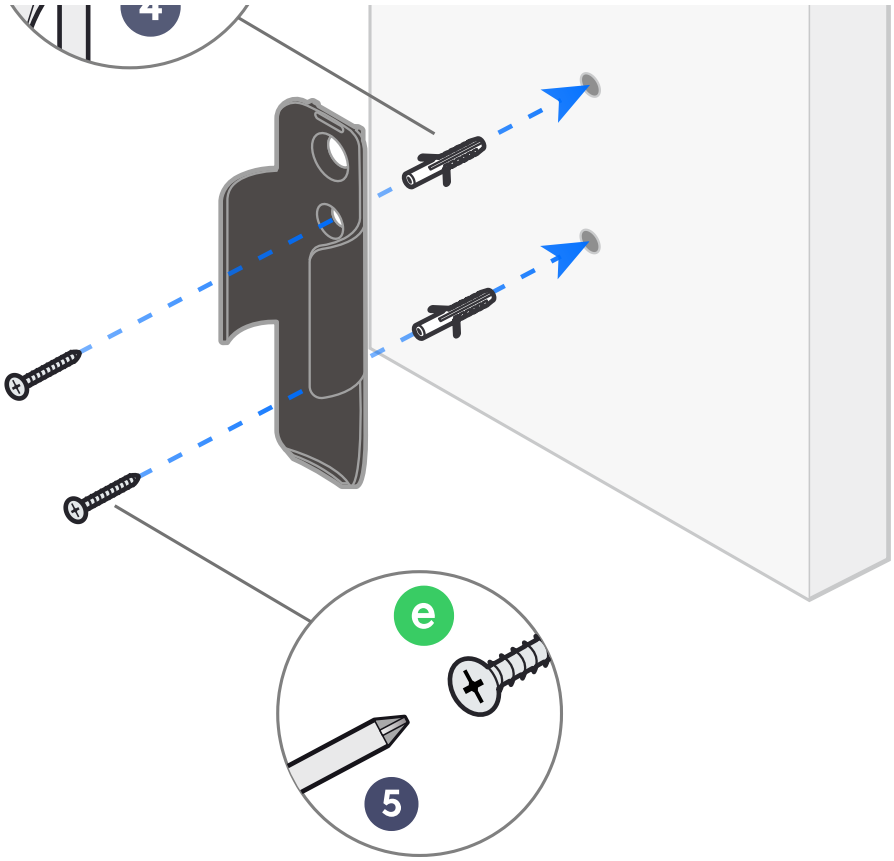
e
5

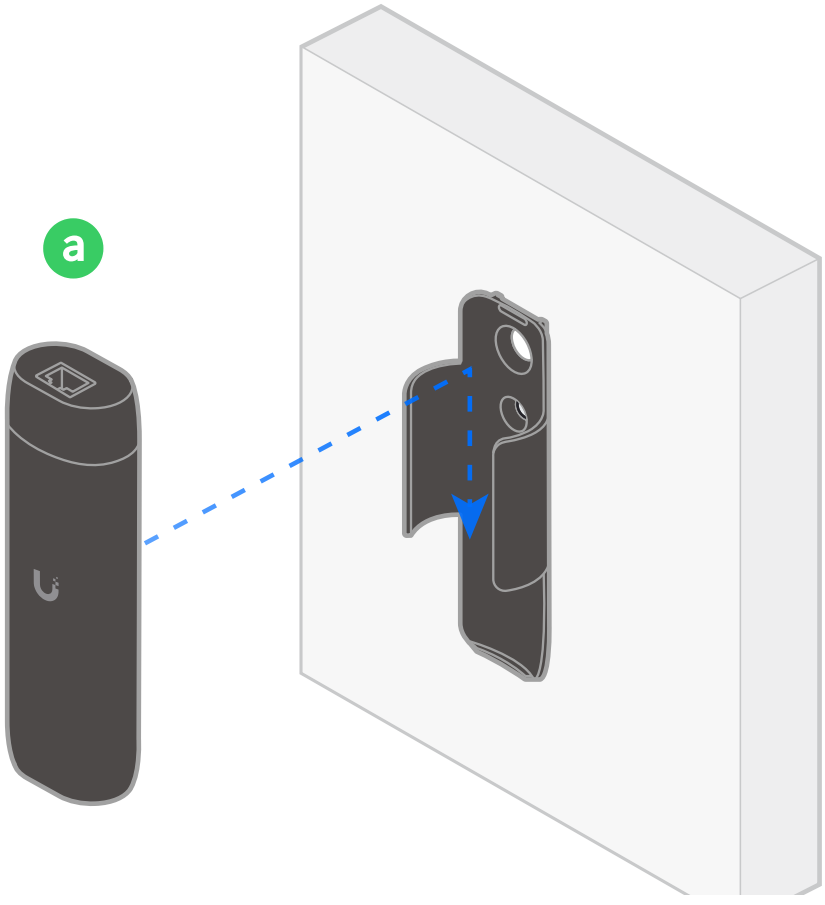
a

B

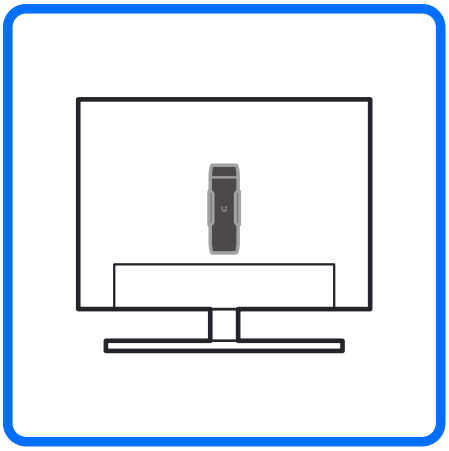



1

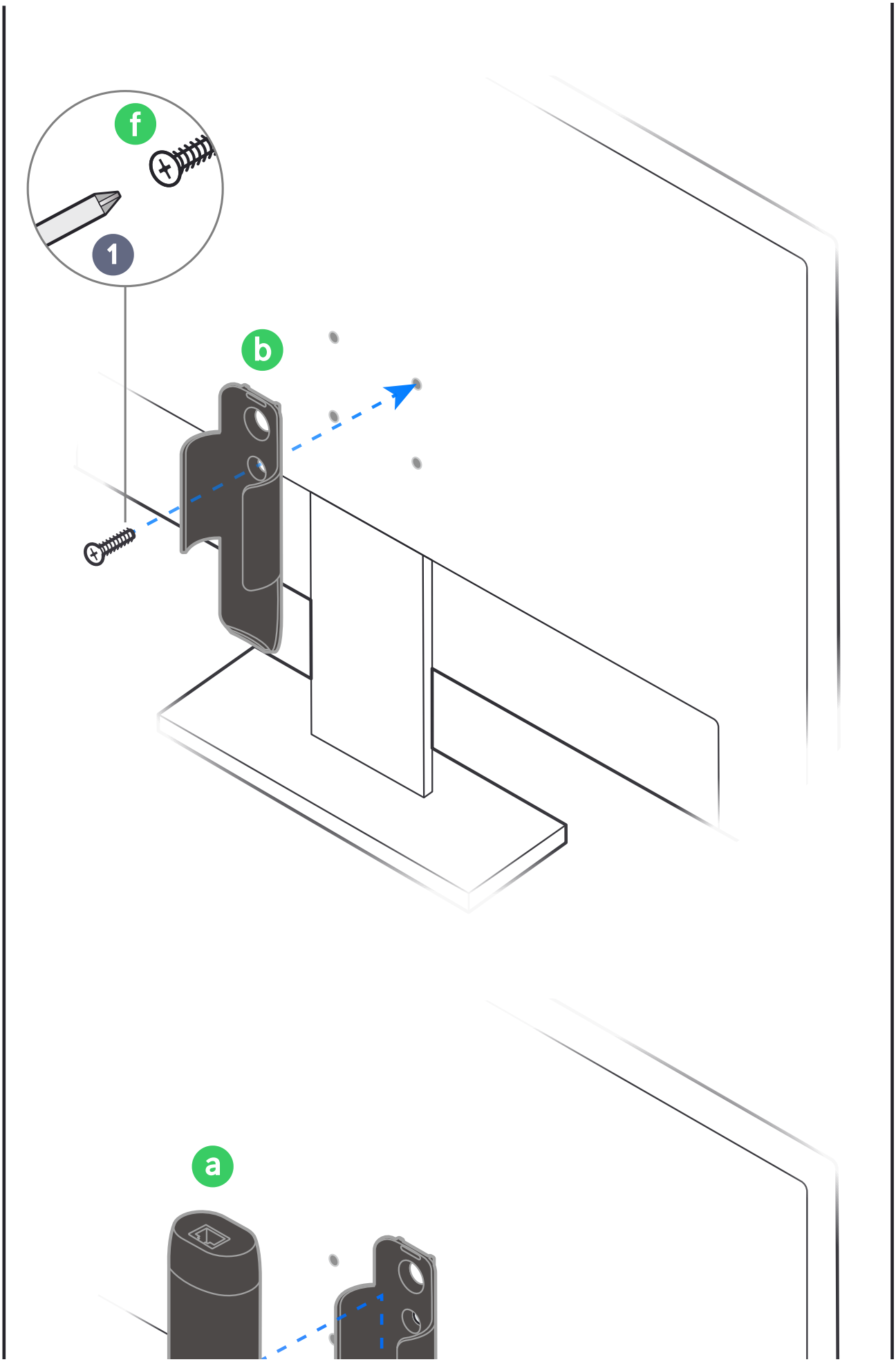
f
1
b
a

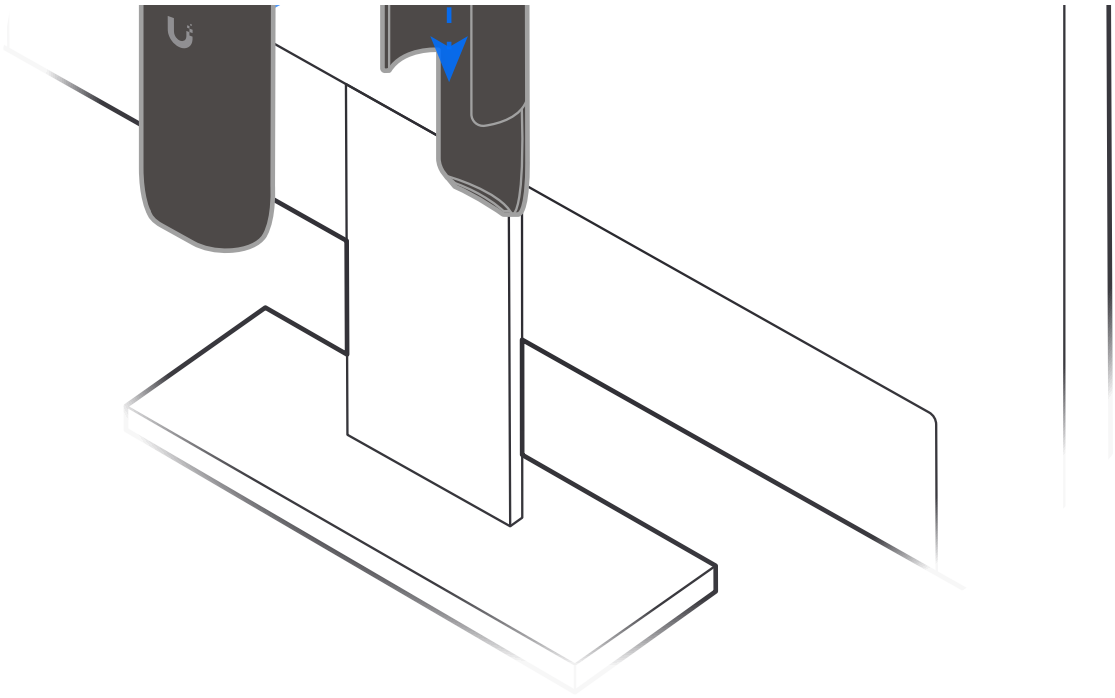

C

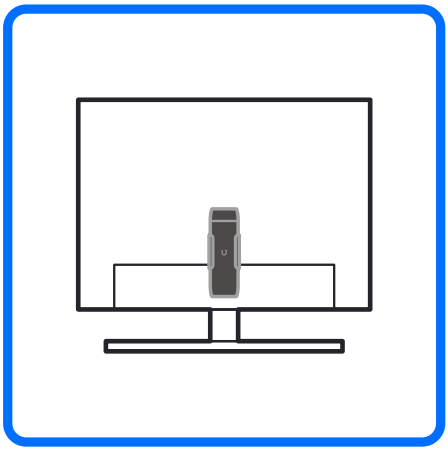


1

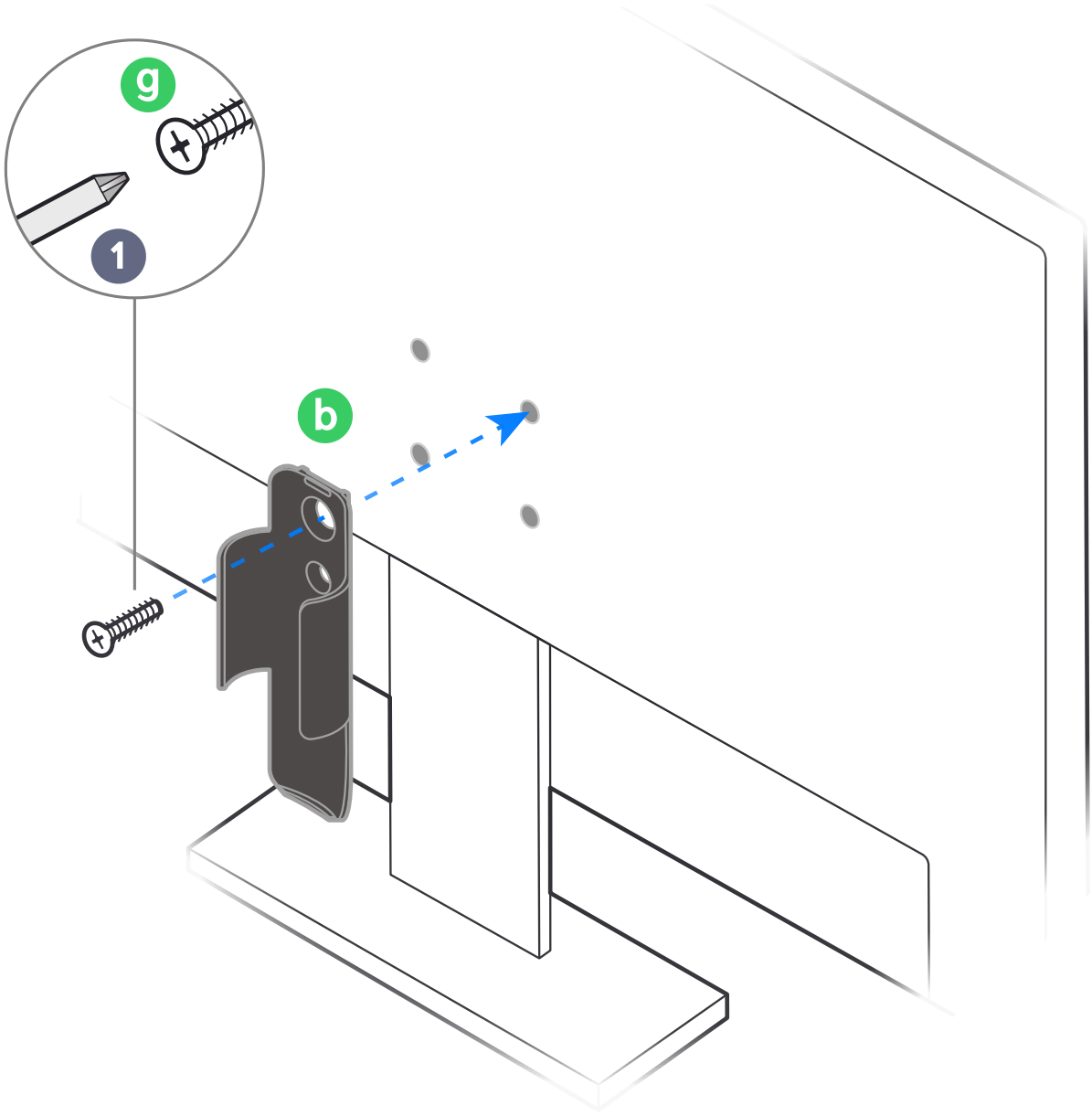
g
1
b

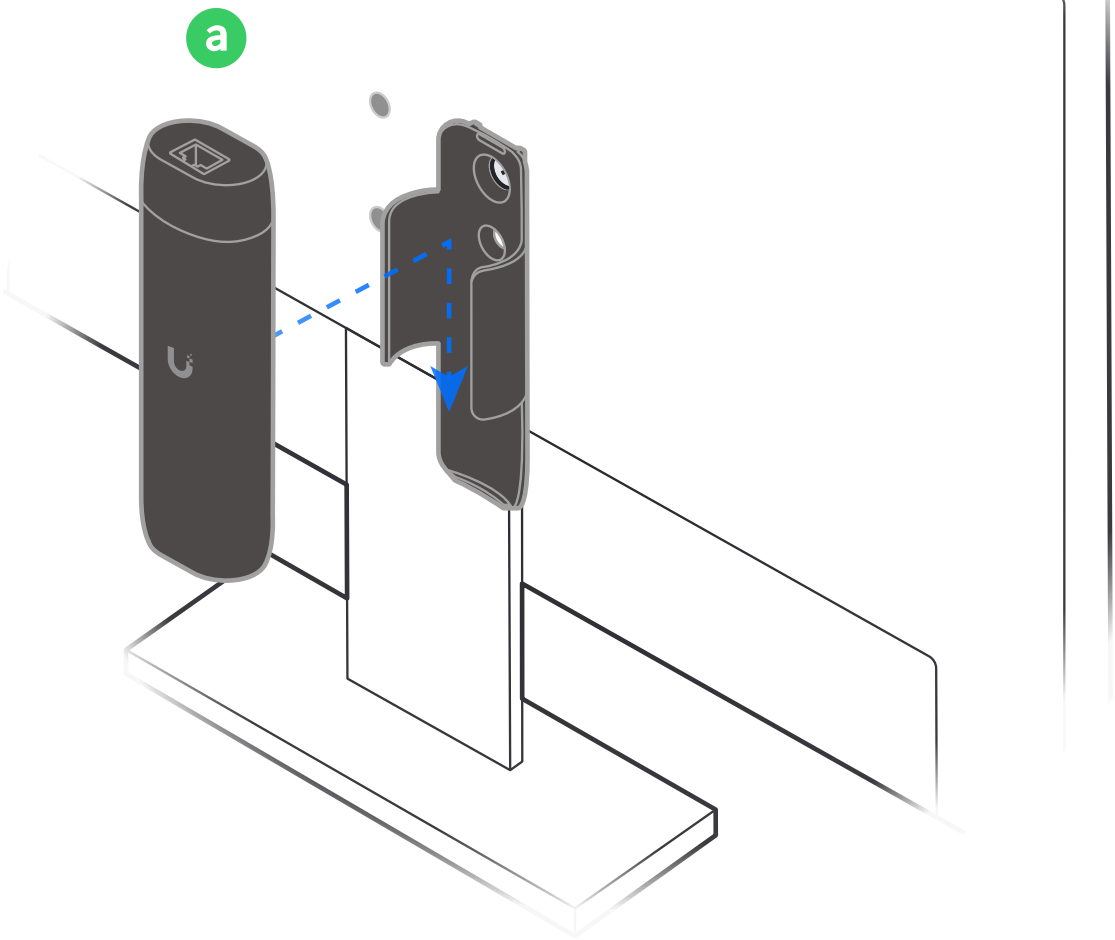

D

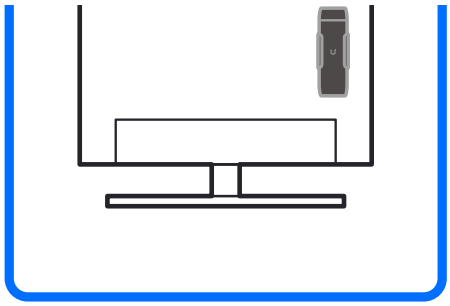

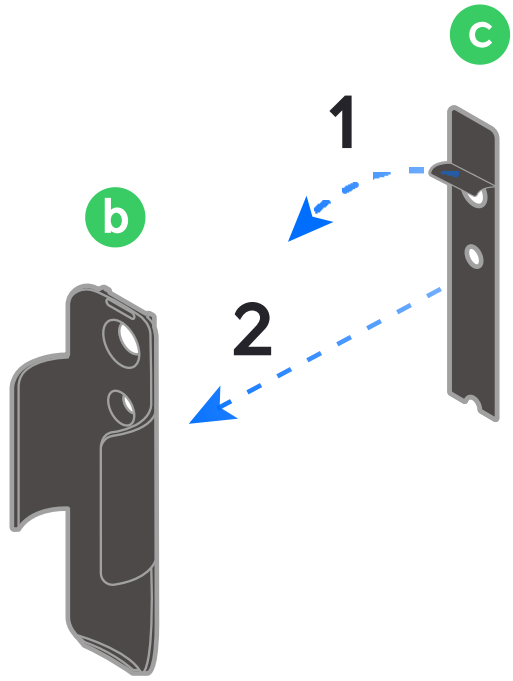
c
1
b
2

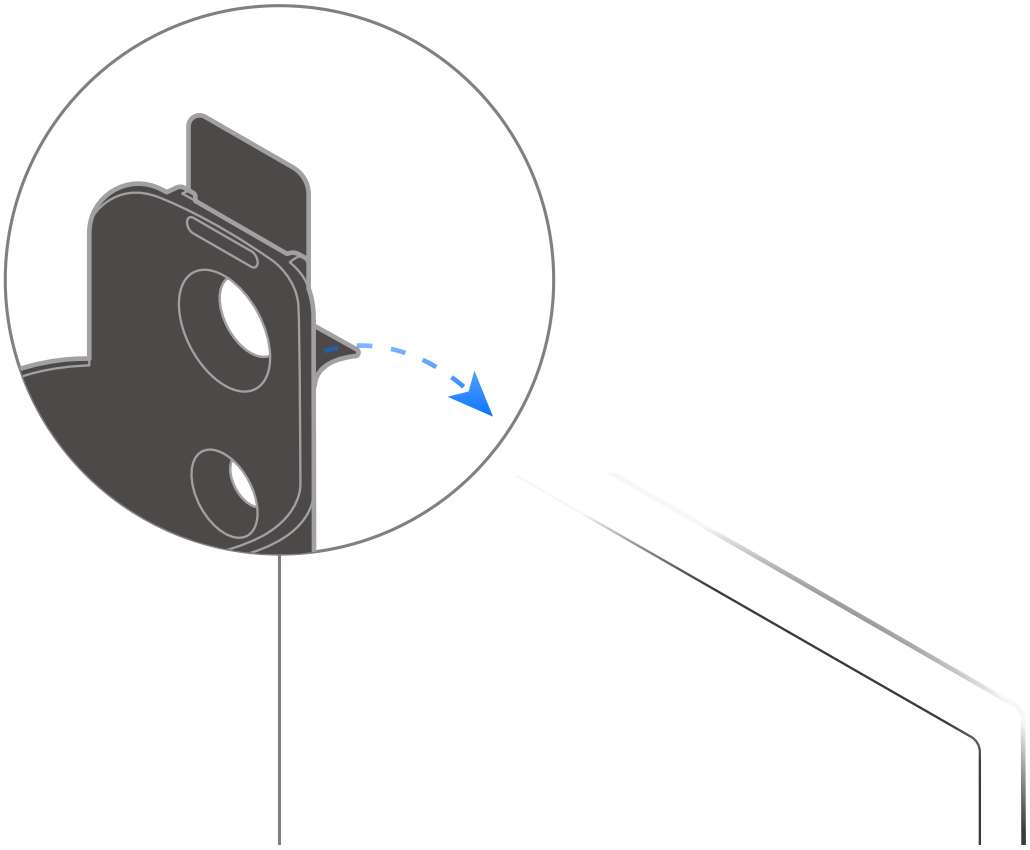

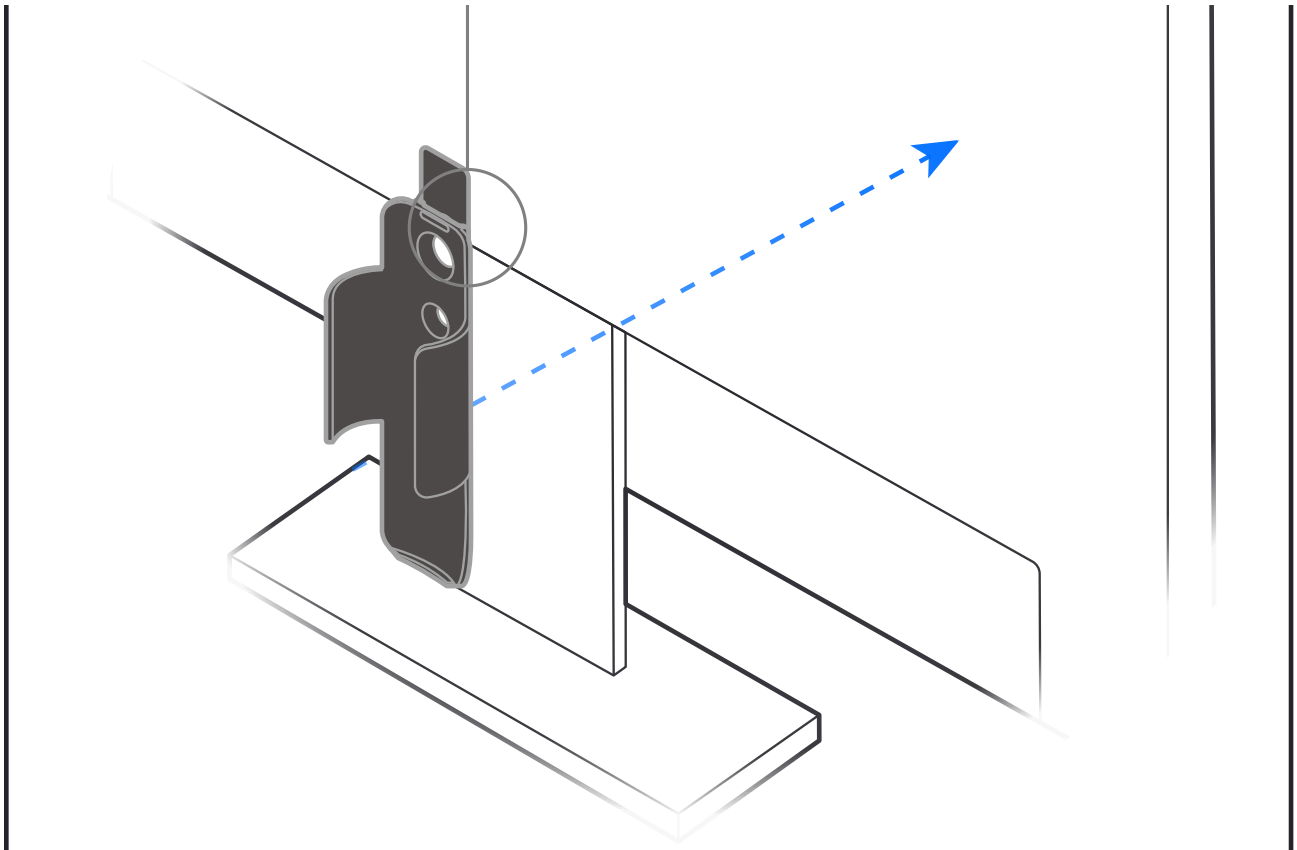

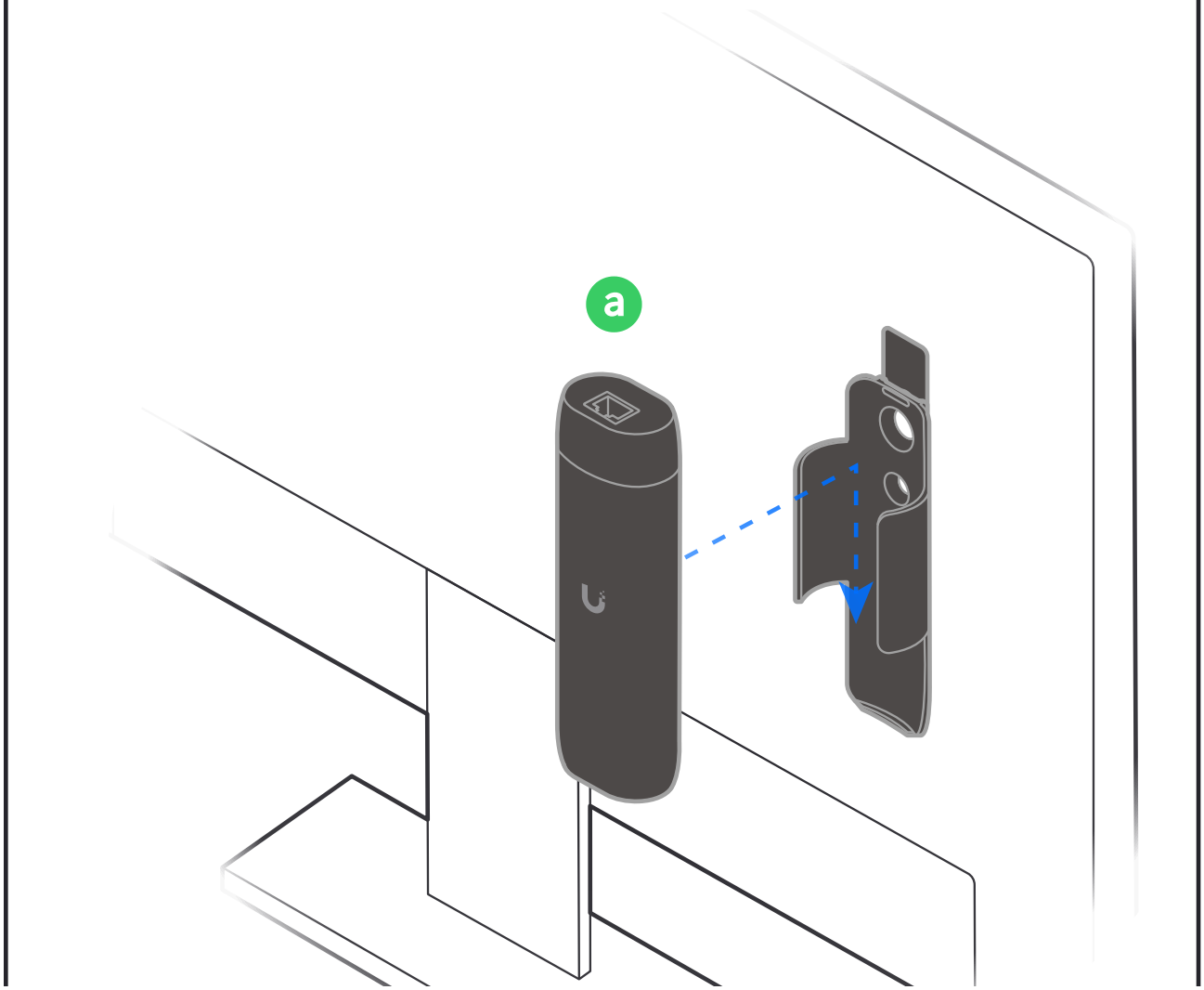
a

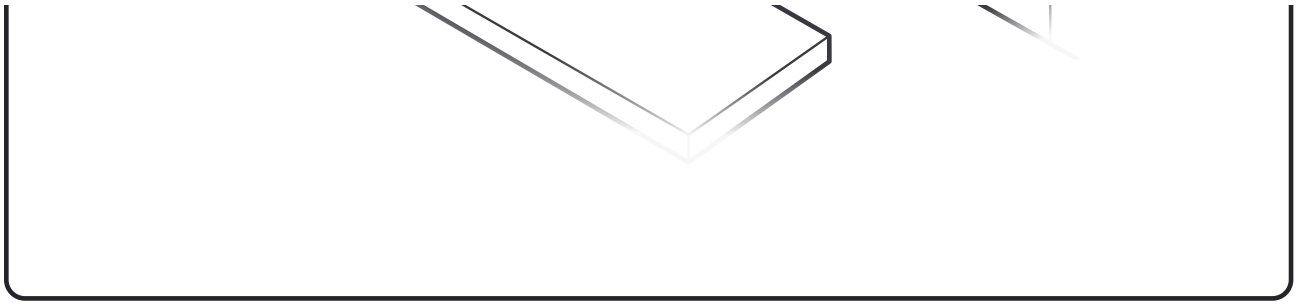

2

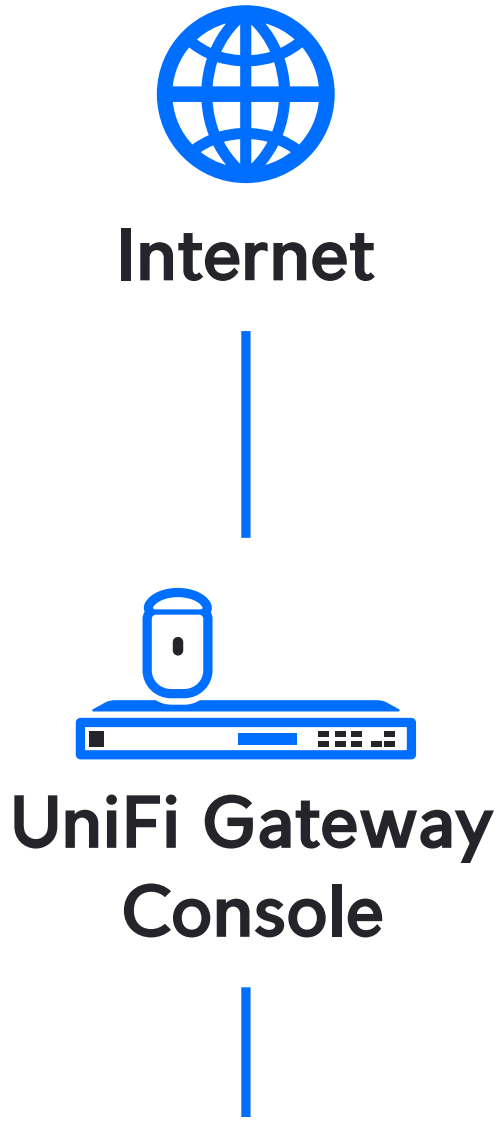

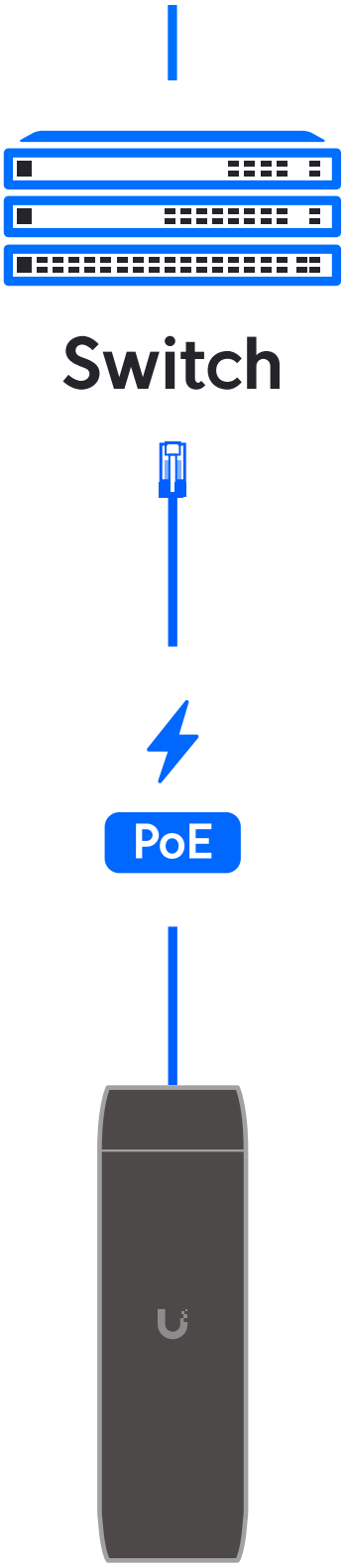

3

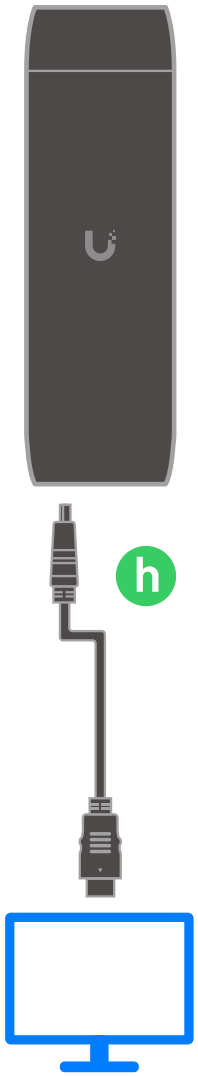

Display

4

Download on the App Store

GET IT ON Google Play



If you need further assistance, visit our Help Center or contact Ubiquiti Support.

©2021 Ubiquiti Inc. All rights reserved. Ubiquiti, Ubiquiti Networks, the Ubiquiti U logo, UniFi, and UniFi Protect are trademarks or registered trademarks of Ubiquiti Inc. in the United States and in other countries. The terms HDMI, HDMI High-Definition Multimedia Interface, and the HDMI Logo are trademarks or registered trademarks of HDMI Licensing Administrator, Inc. All other trademarks are the property of their respective owners.