User Manual

TS1000D Series Tripod Turnstile

Date: September 2020

Doc Version: 1.0

English

Thank you for choosing our product. Please read the instructions carefully before operation. Follow these instructions to ensure that the product is functioning properly. The images shown in this manual are for illustrative purposes only.



For further details, please visit our Company's website www.zkteco.com.

Copyright © 2020 ZKTECO CO., LTD. All rights reserved.

Without the prior written consent of ZKTeco, no portion of this manual can be copied or forwarded in any way or form. All parts of this manual belong to ZKTeco and its subsidiaries (hereinafter the "Company" or "ZKTeco").

Trademark

ZKTeco is a registered trademark of ZKTeco. Other trademarks involved in this manual are owned by their respective owners.

Disclaimer

This manual contains information on the operation and maintenance of the ZKTeco equipment. The copyright in all the documents, drawings, etc. in relation to the ZKTeco supplied equipment vests in and is the property of ZKTeco. The contents hereof should not be used or shared by the receiver with any third party without express written permission of ZKTeco.

The contents of this manual must be read as a whole before starting the operation and maintenance of the supplied equipment. If any of the content(s) of the manual seems unclear or incomplete, please contact ZKTeco before starting the operation and maintenance of the said equipment.

It is an essential pre-requisite for the satisfactory operation and maintenance that the operating and maintenance personnel are fully familiar with the design and that the said personnel have received thorough training in operating and maintaining the machine/unit/equipment. It is further essential for the safe operation of the machine/unit/equipment that personnel has read, understood and followed the safety instructions contained in the manual.

In case of any conflict between terms and conditions of this manual and the contract specifications, drawings, instruction sheets or any other contract-related documents, the contract conditions/documents shall prevail. The contract specific conditions/documents shall apply in priority.

ZKTeco offers no warranty, guarantee or representation regarding the completeness of any information contained in this manual or any of the amendments made thereto. ZKTeco does not extend the warranty of any kind, including, without limitation, any warranty of design, merchantability or fitness for a particular purpose.

ZKTeco does not assume responsibility for any errors or omissions in the information or documents which are referenced by or linked to this manual. The entire risk as to the results and performance obtained from using the information is assumed by the user.

ZKTeco in no event shall be liable to the user or any third party for any incidental, consequential, indirect, special, or exemplary damages, including, without limitation, loss of business, loss of profits, business interruption, loss of business information or any pecuniary loss, arising out of, in connection with, or relating

 Copyright©2020 ZKTECO CO., LTD. All rights reserved.

to the use of the information contained in or referenced by this manual, even if ZKTeco has been advised of the possibility of such damages.

This manual and the information contained therein may include technical, other inaccuracies or typographical errors. ZKTeco periodically changes the information herein which will be incorporated into new additions/amendments to the manual. ZKTeco reserves the right to add, delete, amend or modify the information contained in the manual from time to time in the form of circulars, letters, notes, etc. for better operation and safety of the machine/unit/equipment. The said additions or amendments are meant for improvement /better operations of the machine/unit/equipment and such amendments shall not give any right to claim any compensation or damages under any circumstances.

ZKTeco shall in no way be responsible (i) in case the machine/unit/equipment malfunctions due to any non-compliance of the instructions contained in this manual (ii) in case of operation of the machine/unit/equipment beyond the rate limits (iii) in case of operation of the machine and equipment in conditions different from the prescribed conditions of the manual.

The product will be updated from time to time without prior notice. The latest operation procedures and relevant documents are available on http://www.zkteco.com

If there is any issue related to the product, please contact us.

ZKTeco Headquarters

Address ZKTeco Industrial Park, No. 26, 188 Industrial Road,
Tangxia Town, Dongguan, China.

Phone +86 769 - 82109991

Fax +86 755 - 89602394

For business related queries, please write to us at: sales@zkteco.com.

To know more about our global branches, visit www.zkteco.com.

Copyright©2020 ZKTECO CO., LTD. All rights reserved.

About the Company

ZKTeco is one of the world's largest manufacturer of RFID and Biometric (Fingerprint, Facial, Finger-vein) readers. Product offerings include Access Control readers and panels, Near & Far-range Facial Recognition Cameras, Elevator/floor access controllers, Turnstiles, License Plate Recognition (LPR) gate controllers and Consumer products including battery-operated fingerprint and face-reader Door Locks. Our security solutions are multi-lingual and localized in over 18 different languages. At the ZKTeco state-of-the-art 700,000 square foot ISO9001-certified manufacturing facility, we control manufacturing, product design, component assembly, and logistics/shipping, all under one roof.

The founders of ZKTeco have been determined for independent research and development of biometric verification procedures and the productization of biometric verification SDK, which was initially widely applied in PC security and identity authentication fields. With the continuous enhancement of the development and plenty of market applications, the team has gradually constructed an identity authentication ecosystem and smart security ecosystem, which are based on biometric verification techniques. With years of experience in the industrialization of biometric verifications, ZKTeco was officially established in 2007 and now has been one of the globally leading enterprises in the biometric verification industry owning various patents and being selected as the National High-tech Enterprise for 6 consecutive years. Its products are protected by intellectual property rights.

About the Manual

This manual introduces the operations of **TS1000D Series Tripod Turnstile** product.

All figures displayed are for illustration purposes only. Figures in this manual may not be exactly consistent with the actual products.

Copyright©2020 ZKTECO CO., LTD. All rights reserved.

Document Conventions

Conventions used in this manual are listed below:

GUI Conventions

For Software	
Convention	**Description**
Bold font	Used to identify software interface names e.g. **OK**, **Confirm**, **Cancel**
>	Multi-level menus are separated by these brackets. For example, File > Create > Folder.
For Device	
Convention	**Description**
< >	Button or key names for devices. For example, press <OK>
[ ]	Window names, menu items, data table, and field names are inside square brackets. For example, pop up the [New User] window
/	Multi-level menus are separated by forwarding slashes. For example, [File/Create/Folder].

Symbols

Convention	Description
	This implies about the notice or pays attention to, in the manual
	The general information which helps in performing the operations faster
	The information which is significant
	Care taken to avoid danger or mistakes
	The statement or event that warns of something or that serves as a cautionary example.

Copyright©2020 ZKTECO CO., LTD. All rights reserved.

Table of Contents

1 TECHNICAL SPECIFICATIONS 6

2 UNPACKING AND TESTING THE TRIPOD TURNSTILE 7

2.1 UNPACKING 7
2.2 ARM INSTALLATION 7
2.3 POWER-ON TEST BEFORE INSTALLATION 8

3 EQUIPMENT INSTALLATION 8

3.1 INSTALLATION CONDITIONS 8
3.2 CABLING 10
3.3 INSTALLATION 10

4 CABLE DIAGRAM 11

4.1 FUNCTION DESCRIPTION OF THE TURNSTILE CONTROL BOARD 11
4.2 CONNECTION DIAGRAM OF THE ACCESS CONTROLLER 13
4.3 DIP K1 SWITCH CONFIGURATION 13
4.3.1 SETTING THE TURNSTILE OPENING DURATION 13
4.3.2 DIRECTION INDICATOR 14
4.3.3 CONTINUE PASSING FUNCTION 14
4.3.4 ALARM FUNCTION (OPTIONAL) 14

5 EQUIPMENT PRECAUTIONS AND MAINTENANCE 15

5.1 PRECAUTIONS 15
5.2 MAINTENANCE 16

6 TROUBLESHOOTING 17

ATTACHMENT 1 FACTORY SETTINGS 17

ATTACHMENT 2 CONNECTION DIAGRAM OF CONTROL BOARD AND ACCESS CONTROL PANEL 18

Copyright©2020 ZKTECO CO., LTD. All rights reserved.

Please read this document carefully before installation and using the device.

1 Technical Specifications

Input Voltage	AC 100~120V /200~240V, 50Hz /60Hz	Max. Tolerance of Arms	Center: 80 kg End: 40 kg
Rated Power	60 W	Ingress Protection Degree	IP54
Operating Environment	Indoor and Outdoor (shelter)	Arm Length (mm)	500
Operating Temperature	-28°C ~ 60°C	Net Weight	36kg
Operating Humidity	5% ~ 85%	Gross Weight	50kg
Flow Rate	Max 30 passages / minute	Dimension(mm) (Figure 1)	L = 520, W = 310, H = 1010
Input Control Signal	Dry contact	Package Size (mm)	L = 570, W = 365, H = 1080

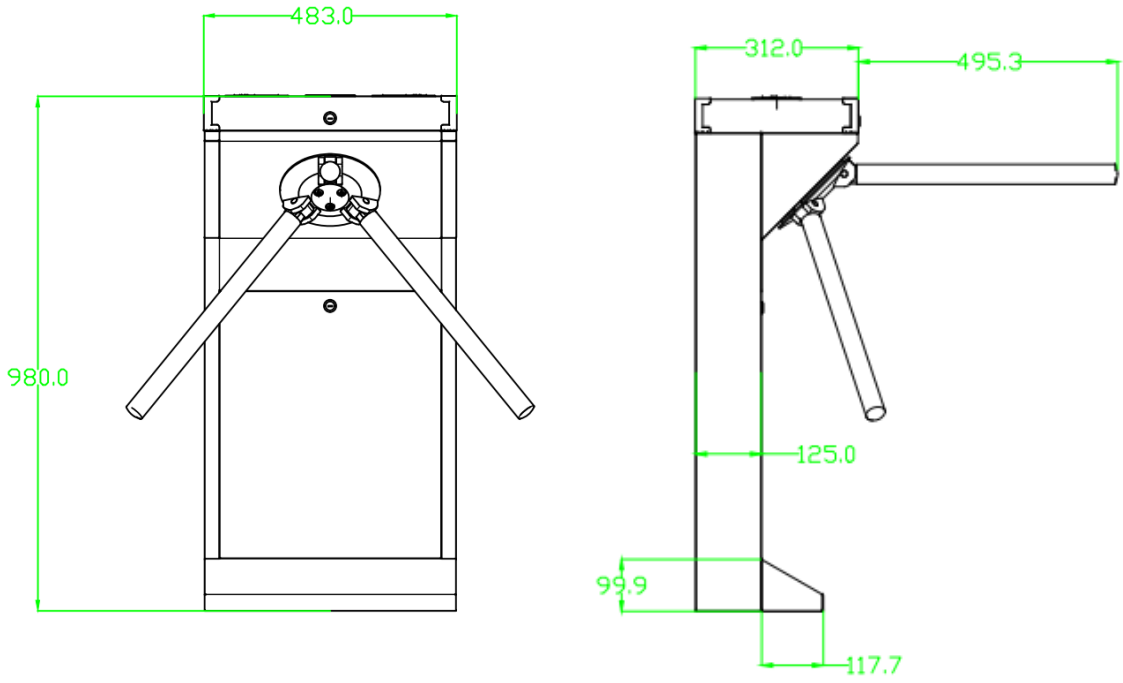

Figure 1

Copyright©2020 ZKTECO CO., LTD. All rights reserved.

2 Unpacking and Testing the Tripod Turnstile

2.1 Unpacking

The top part of the tripod is heavy; do not remove the foam lining at the bottom before installation, as shown in Figure 2-1.

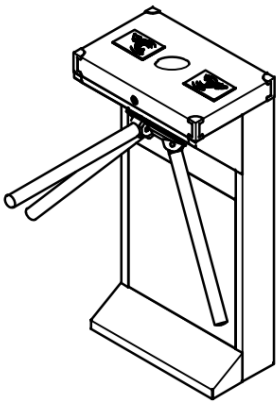

Do not remove the foam lining at the bottom before installation.

Figure 2-1

2.2 Arm Installation

In order to prevent the arm from damaging during transportation, the arm will not be initially installed to the devices.

Installation procedure

Put the arm kit into the hole of cabinet; make sure the screw holes match with mechanism core, then tighten 3 hex screws, as shown in Figure 2-2.

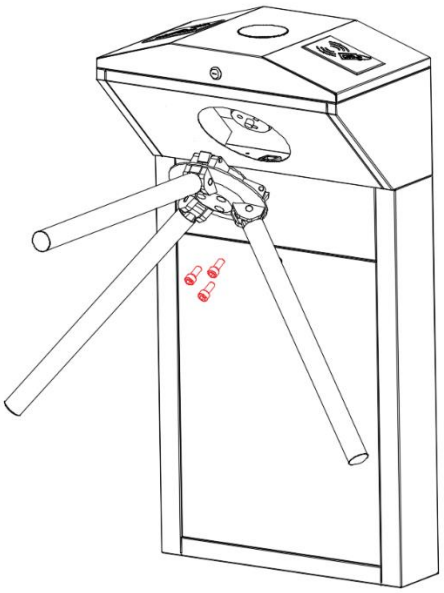

Figure 2-2

Copyright©2020 ZKTECO CO., LTD. All rights reserved.

2.3 Power-on Test before Installation

1. Please make sure that the power requirements are strictly met to avoid permanent damages to the unit. Input voltage: AC 100~120V /200~240V.

   Note: The tripod turnstile must be connected to the ground (earth).

2. Power on and wait 30s for the tripod turnstile to finish the self-check program.
3. Lift the arms manually, as shown in Figure 2-3B.
4. Check whether the tripod turnstile and the LED indicators work properly.

   If there is any problem, please contact the supplier.

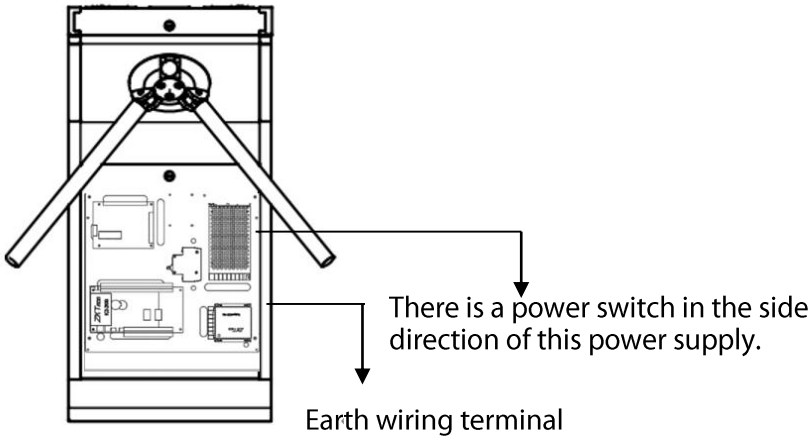

Figure 2-3A

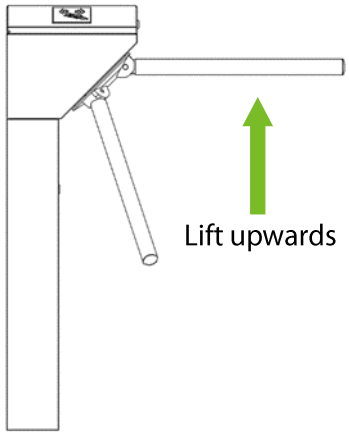

Figure 2-3B

3 Equipment Installation

3.1 Installation Conditions

The equipment must be installed on concrete ground, ensuring that expansion bolts can be secured firmly.

You are suggested to install an assistant framework or fence to form a passageway, as shown in Figure 3-1.

Copyright©2020 ZKTECO CO., LTD. All rights reserved.

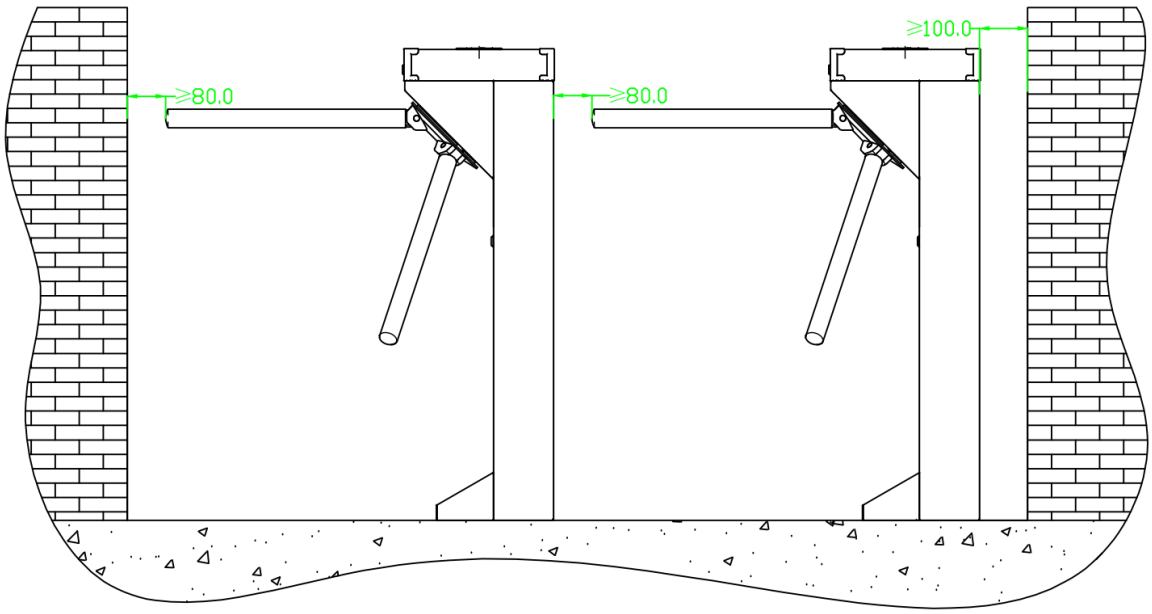

Figure 3-1

Notes:

1. When installing the tripod turnstile against the wall, please reserve a distance of at least 100 mm in order to open the cover for future adjustment and maintenance.

2. The spare space from the end of the arm shall not be greater than 80 mm (see Figure 3-1).

3. You are also recommended to set a warning line for card swiping (see Figure 3-2). The warning line prompts users to swipe cards in a particular area, which would greatly reduce the probability of equipment failure caused by improper operations.

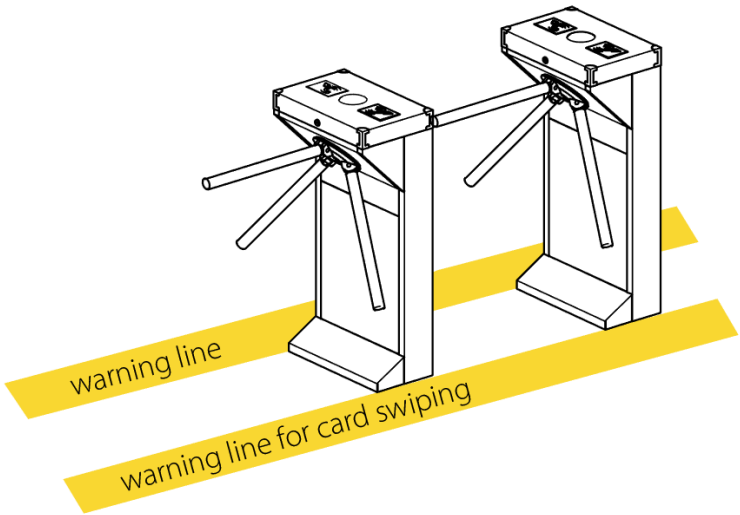

Figure 3-2

Copyright©2020 ZKTECO CO., LTD. All rights reserved.

3.2 Cabling

There are inlets in the bottom plate for cabling, as shown in Figure 3-3. Units of all data is millimeter. Power supply and communication wire should go through the inlet. Cable protection covers are suggested to use if it is surface mounted.

Warning: The tripod turnstile must be connected to the ground (earth); there is wiring interface near the power switch.

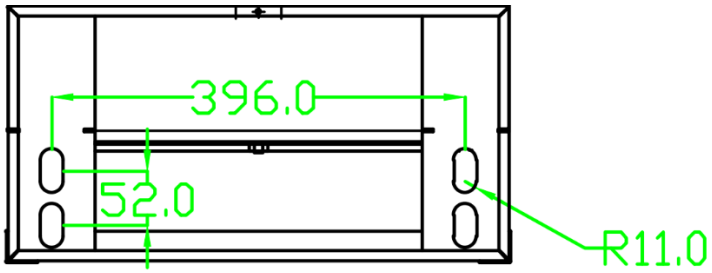

Figure 3-3

3.3 Installation

1. Drill holes.

Drill holes according to the locations of holes as shown in Figure 3-3.

2. Fix the mounting plate to its original position.

Place the mounting plate properly, then apply screw securing glue on the surface and threads of the expansion bolts, install four expansion bolts to secure the mounting plate, and use a horizontal ruler to test the levelness of the mounting plate. If the mounting plate is not levelled, adjust it with the gaskets provided. Note that all the four expansion bolts must be installed properly, as shown in Figure 3-4.

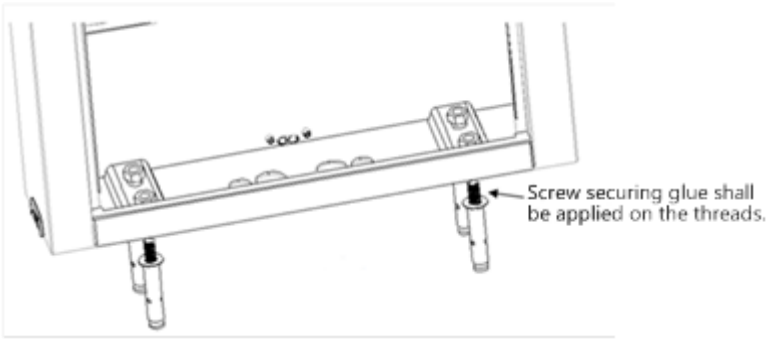

Figure 3-4

3. Install the turnstile on the mounting plate and tighten the screws. Apply screw securing glue before using and putting gaskets on the screws to adjust the direction of the turnstile. If the tripod turnstile is not levelled, you can place gaskets to adjust, as shown in Figure 3-5.

Copyright©2020 ZKTECO CO., LTD. All rights reserved.

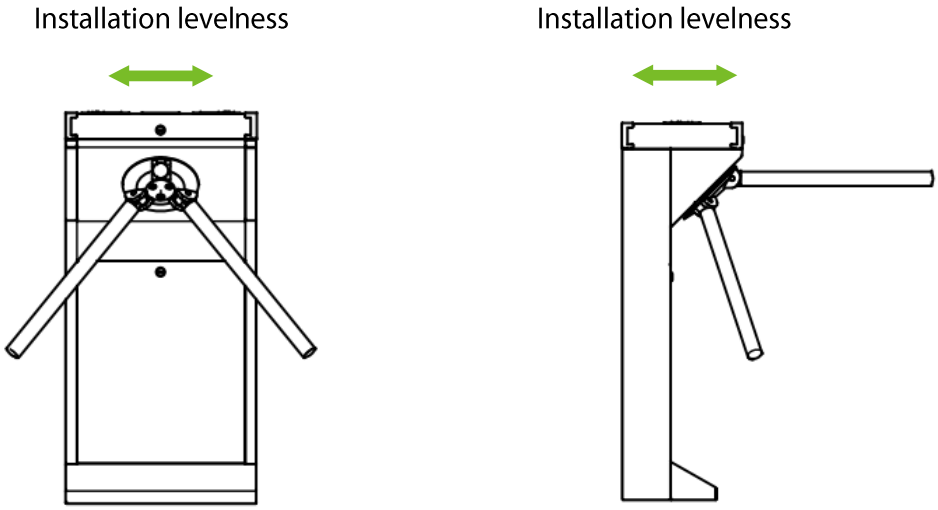

Figure 3-5

4 Cable Diagram

4.1 Function Description of the Turnstile Control Board

If you are using standard device that without RFID or Fingerprint reader, you need to connect access control system to the main board, please check the content in this chapter carefully.

Turnstile control board's diagram as shown in Figure 4-1.

Copyright©2020 ZKTECO CO., LTD. All rights reserved.

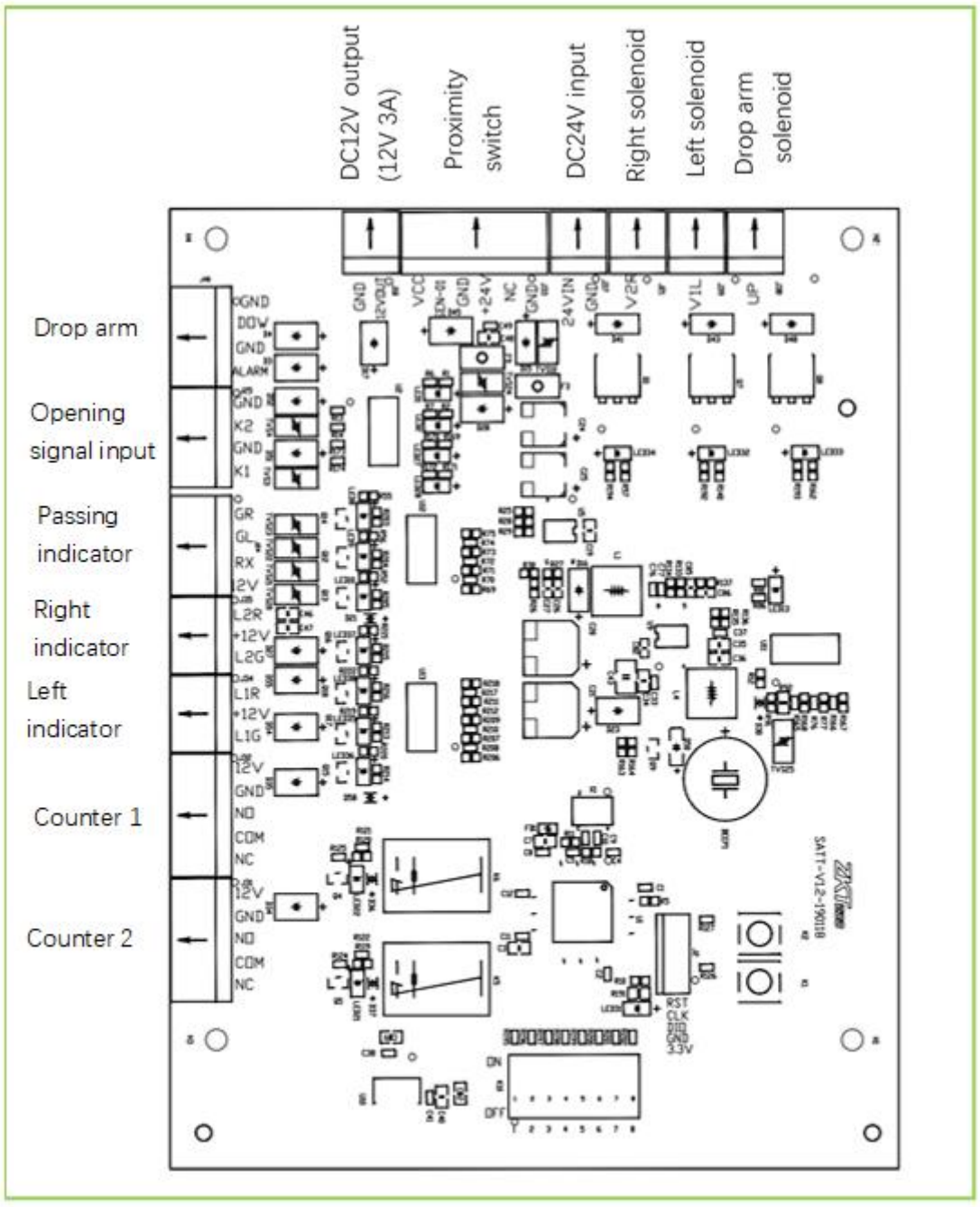

Figure 4-1

Note: The third party access control system lock relay trigger time should be 1 second or less than 1 second.

Copyright©2020 ZKTECO CO., LTD. All rights reserved.

4.2 Connection Diagram of the Access Controller

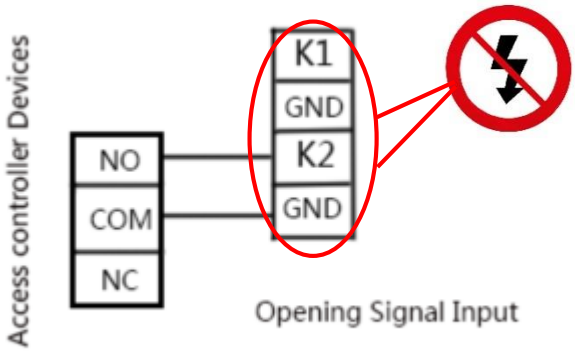

Figure 4-2

Note: The lock relay duration of access controller device needs to be set to 1s. Forbidden using electrically charged objects to connect to the port of Opening Signal Input, otherwise will damage the control board.

4.3 DIP K1 Switch Configuration

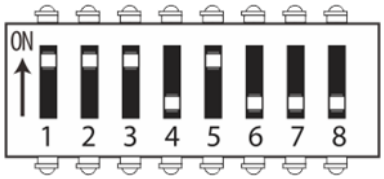

Figure 4-3

Pin	1	2	3	4	5	6	7	8
Function Setting	Opening Duration			Direction Indicator		Continue Passing Function		Alarm
Default	1	1	1	0	1	0	0	0

0=ON 1=OFF

4.3.1 Setting the Turnstile Opening Duration

Opening duration refers to the period of time from opening to closing once the turnstile receives an opening signal. In the DIP switch, number 1, 2, and 3 are used for duration settings. It can be set to different values from 5s to 60s according to the following chart.

Copyright©2020 ZKTECO CO., LTD. All rights reserved.

Bit Setting	Duration	Bit Setting	Duration
111	5s	011	30s
110	10s	010	40s
101	15s	001	50s
100	20s	000	60s

Note: The turnstile's opening duration is set to 5s by default.

4.3.2 Direction Indicator

It is to indicate whether people can pass through the gate. The green arrow means passing is allowed while the red cross "X" means that passing is prohibited. The indicator status can be set with number 4 and 5 in the DIP switch. The descriptions of the bit settings are as follows:

11 = Passing is allowed in both directions.

10 = One-way forbidden; right passing is allowed.

01 = One-way forbidden; left passing is allowed.

00 = Both ways forbidden.

4.3.3 Continue Passing Function

With the "Continue Passing" function, the turnstile could remember at most 20 swipes of one card at one time and allows up to 20 people to pass so they don't have to swipe card each time. This function can be enabled or disabled with number 6 in the DIP switch. The descriptions of the bit settings are as follows:

In the DIP switch, number 6 is used to enabled or disabled the **Continue Passing Function**; number 7 is used to set the initial value of **Continue Passing Function**.

<table>
<tr><th>Number 6</th><th>Number 7</th><th>Function</th><th>Opening Duration</th></tr>
<tr><td>0</td><td>Disabled</td><td>Disabled Continue Passing Function</td><td>Please refer to section 4.3.1 Setting the Turnstile Opening Duration.</td></tr>
<tr><td rowspan="2">1</td><td>1</td><td rowspan="2">Enabled Continue Passing Function</td><td>The initial value is 16s, and the Opening Duration = 16 + (N -1) * 6.</td></tr>
<tr><td>0</td><td>The initial value is 8s, and the Opening Duration = 8+ (N -1) * 6.</td></tr>
</table>

4.3.4 Alarm Function (Optional)

In the DIP K1 switch, number 8 is used to enabled or disabled the **Alarm Function**.

1 = enabled

0 = disabled

Note: Please set to 0 when working normally, that is to say that Alarm Function is disabled.

Copyright©2020 ZKTECO CO., LTD. All rights reserved.

5 Equipment Precautions and Maintenance

5.1 Precautions

1. It is recommended to purchase additional accessories to use the product outdoors.
   1) You may install cooling fans for the equipment if the working temperature is often above 50 ºC.
   2) The device is rated IP54 waterproof under proper installation. However, its ability to stand in extreme weather conditions, such as typhoon, is not guaranteed.
   3) If the temperature is around or below -30℃, you are recommended to install a heating plate for the equipment. You might need to turn the power on multiple times to let the device automatically heat up through the self-check program.
   4) The service life of this equipment may be shortened if it works outdoors in coastal areas or a region prone to acid rain.
2. If the power and signal cables are connected properly, this equipment can be immersed under water at a depth of 250 mm, but it must not be powered on when it is immersed in water.
3. It is highly recommended to set a warning card-swiping line to remind passers-by to correctly swipe cards at a reasonable distance from the device to prevent passers-by from being squeezed.
4. It is recommended to place a warning sign at a conspicuous position, and prompt: "**Please swipe your card outside the warning line and pass in order. Thank you!**"

The maximum stress tolerance of the tripod turnstile's arms

Please note that the maximum tolerance at the center and the ends of the arm is 80kg and 40kg, respectively (See Figure 5-1). When the impact force on the tripod turnstile reaches the designed limit, the arms will break down first to ensure that the body of the equipment is not damaged and the passer-by is not injured.

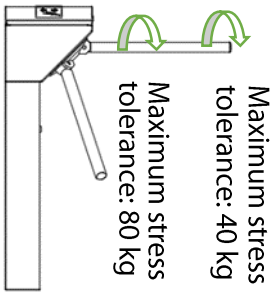

Figure 5-1

In case of emergencies

This equipment is designed to drop the arms automatically if there is power failure thus people can pass freely. Also, there is an interface on the turnstile control board connecting with an emergency switch (J6

Copyright©2020 ZKTECO CO., LTD. All rights reserved.

Drop Arm) which keeps the tripod turnstile open in case of emergencies. Please lift the arms manually after at least 6 seconds after power restoration.

5.2 Maintenance

Forming maintenance consciousness

The tripod turnstile needs to be maintained regularly and repaired once it is damaged. It is recommended placing warning signs at conspicuous positions for alerting every passersby to pass carefully and in good order. Reasonable maintenance consciousness helps to guarantee long-term usage of the tripod turnstile.

Regular maintenance

Cleaning and protection liquid dedicated for stainless steel are recommended to wipe the outer shell of the equipment regularly. The tripod turnstile used outdoors or in an environment with lots of dust must be maintained at least once a year, for example, clean up the dust and add appropriate lubricating oil to the disk wheel. Please note that regular maintenance should only be performed after power-off, as shown in Figure 5-2.

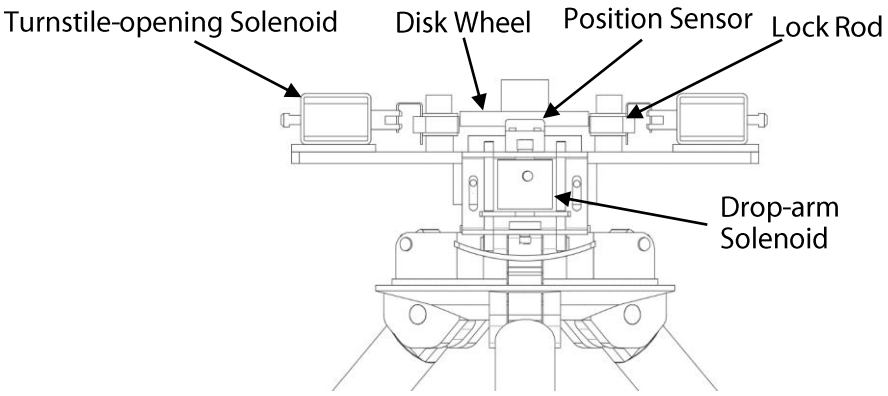

Figure 5-2

Copyright©2020 ZKTECO CO., LTD. All rights reserved.

6 Troubleshooting

Symptom	Troubleshooting
The indicator is not lit when the equipment is powered on.	It may be caused by the power supply or circuit. Check whether the connection cable and power cable are damaged, or whether the wiring is loosed.
The arms of the tripod turnstile cannot be lifted manually after the equipment is powered on.	It may be caused by the problem of related components or drop-arm solenoid. Check whether the drop-arm solenoid is operating, and check the working status of the solenoid, as shown in Figure 5-2.
The tripod turnstile does not grant an access after successful authentication.	It may be caused by lack of permission or a circuit problem. 1. Check whether the user has the permission to pass. 2. Use a multimeter to check whether the NO and COM ports of the access control system have a relay signal output. 3. Short-circuit the ports "K1, GND" and "K2, GND"; if the turnstile is successfully opened, the controller is not normal.
The turnstile allows people to continuously passing one-way side.	1. Check the turnstile-opening solenoid. 2. Check if the access controller "Lock driving duration" is set to 1s. 3. Check whether the turnstile-opening solenoid is operating and check whether something is stuck at the turnstile-opening solenoid, as shown in Figure 5-2.

Attachment 1 Factory Settings

No.	Function	Default
1	Lock Driving Duration	5s
2	Door Sensor	None
3	Verification Interval	1s
4	Controller Communication	TCP/IP: 192.168.1.201
5	Turnstile Opening Duration	5s
6	Passing Direction Indicator	Passing is allowed in both directions
7	Continue Passing Function	Disabled
8	Alarm Function	Disabled

Note: The Lock Driving Duration is 5 seconds by default. Please set it to 1 second. Do not connect an electrically charged objects to any ports of Opening Signal Input, otherwise it will damage the control board.

Copyright©2020 ZKTECO CO., LTD. All rights reserved.

Attachment 2 Connection Diagram of Control Board and Access Control Panel

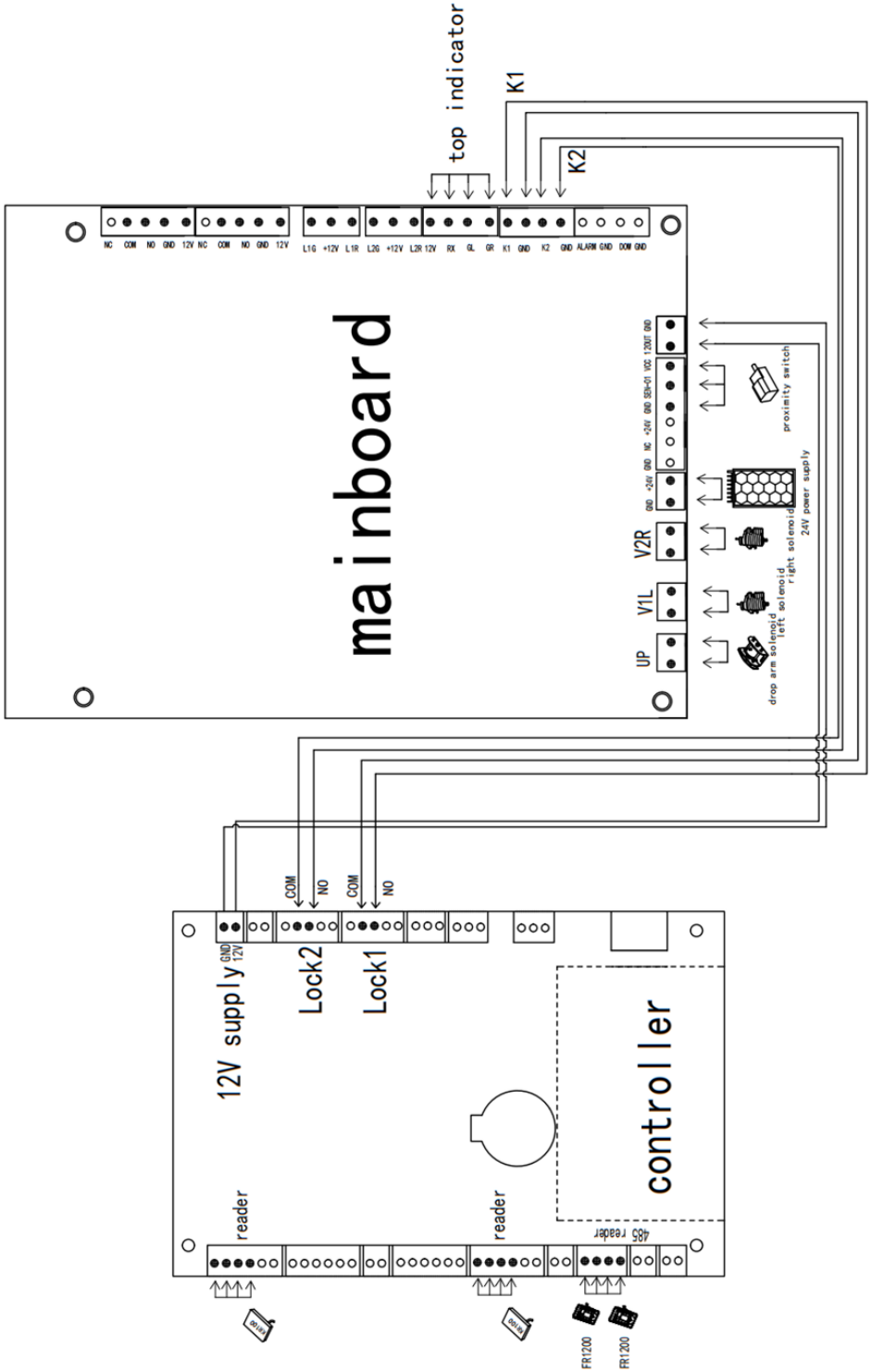

Warning: This is a class A product. In a domestic environment, this product may cause radio interference so that the user may have to take adequate additional measures.

Copyright©2020 ZKTECO CO., LTD. All rights reserved.

ZKTeco Industrial Park, No. 26, 188 Industrial Road,

Tangxia Town, Dongguan, China.

Phone : +86 769 - 82109991

Fax : +86 755 - 89602394

www.zkteco.com

Copyright © 2020 ZKTECO CO., LTD. All Rights Reserved.