Translated from Chinese (Simplified) to English - www.onlinedoctranslator.com

LED Vacuum Pre-Maintenance Tool Instructions

LED vacuum front maintenance tool instruction

Model: DHI-NB-001-PLUS

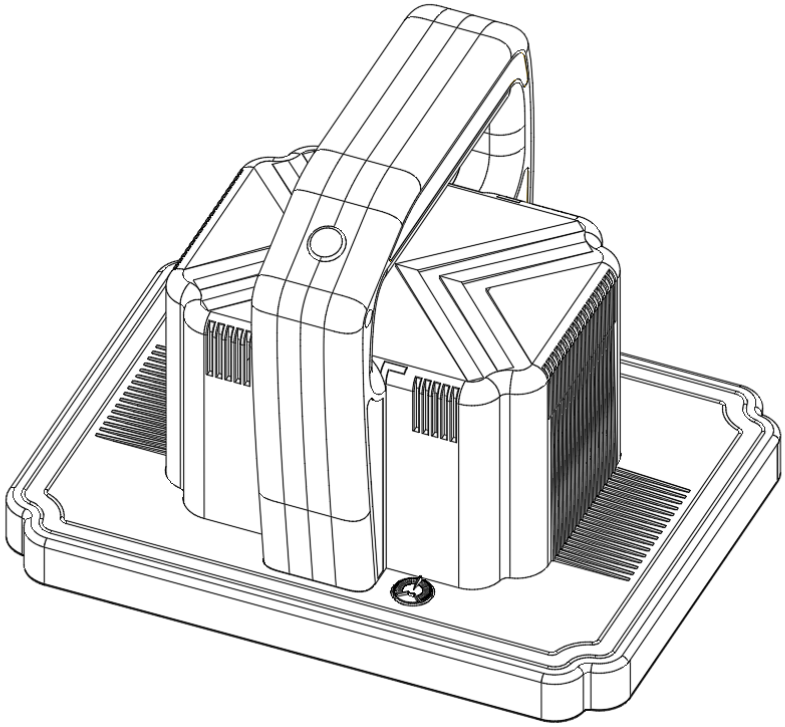

Product advantage

1. Small size, light weight, easy to carry;

Small size, light weight, easy to carry

2. Excellent ergonomic design, more convenient to use;

Excellent ergonomic design for easier use

3. Vacuum degree valve design, suitable for more models;

Vacuum valve design for more models

4. Unique air duct design, better heat dissipation and extended motor life;

Unique air duct design for better heat dissipation and longer motor life

5. Unique limit design prevents the PCB from warping and falling off the lamp;

Unique limit design prevents PCB warp and light falling off

6. Unique anti-static design protects module safety;

Unique anti-static design to protect module security

7. Humanized backpack design makes working at heights safer;

User-friendly backpack design, safer work at height

8. Support charging and discharging at the same time, solving the pain points of temporary losses;

Support for using while charging, solve temporarily out of power

9. Suitable for multiple series of modules, with higher versatility

Suitable for all series of modules, more universal

Tool parameters

Tool parameters

Charger charging voltage: 100-240V

Charger charging voltage: 100-240V

Charger output voltage: 25.2V

Charger output voltage: 25.2V

Lithium battery energy: 42Wh

Lithium battery energy:42Wh

Maximum continuous charging current: 1.0C5A

Maximum continuous charging current: 1.0C5A

Continuous discharge time: 18MIN (This data is laboratory data, and may vary depending on changes in the use environment.

fluctuated)

Continuous discharge duration: 18MIN(This data is laboratory

data, change according to the use environment, data will fluctuate)

Standby power consumption: 10uA

Standby power consumption: 10uA

Working environment: -20-45℃ 15%-85%RH

Working environment: -20-45℃ 15%-85%RH

2023-08-28

Tool specifications and applicable display models

Tool description and applicable display model

Product net weight: 0.9KG

Product net weight: 0.9kg

Length, width and height: 200*150*150MM

L*W*H: 200*150*150MM

Suction cup size: 200x150MM

Suction cup size: 200*150MM

Applicable module size: full range of indoor and outdoor LED display modules

Applicable module size: all indoor serious led display module

338580 da hua 2023-08-28

a

Product schematic

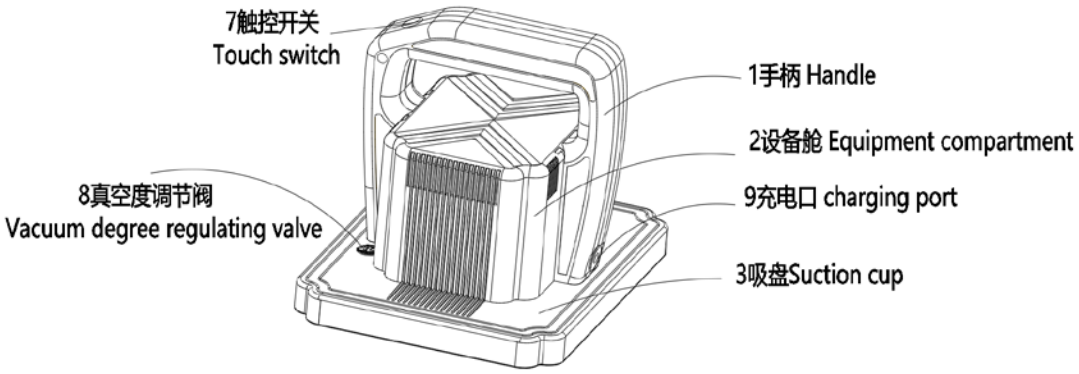

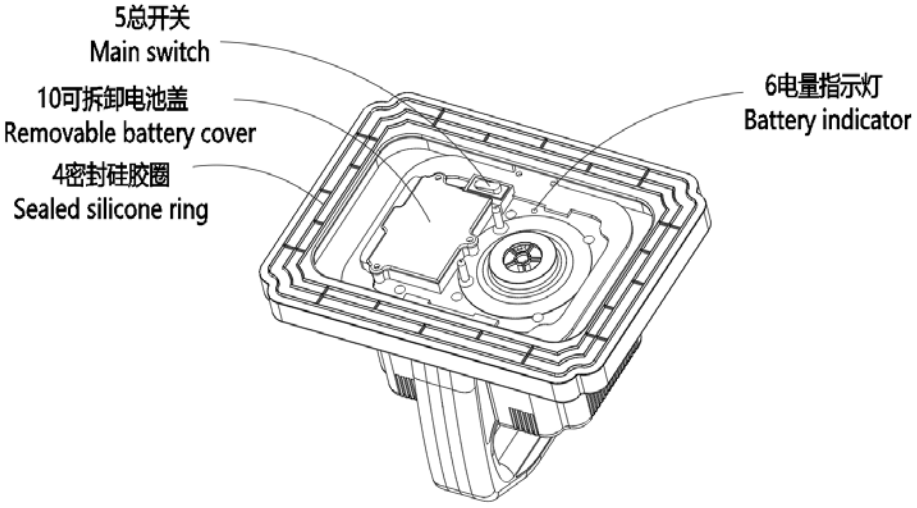

1 Handle 2 Equipment compartment

3 Suction cup 4 Sealed silicone ringSealed silicone ring

5 Main switch 6 Battery indicator

7 Touch switch 8 Vacuum degree regulating valve Vacuum degree regulating valve

9 charging port charging port 10 Removable battery coverRemovable battery cover

Instructions for use

Use operating instructions

Turn on the main switch, hold the tool handle, then align the suction cup at the center of the module, and lightly touch the touch switch to start.

Gently take out the module, hold the module firmly with the other hand, lightly touch the touch switch to turn off the motor, and then turn off the main unit.

Just switch it on and off.**(Note: The motor defaults to low gear, press for 1.5 seconds to activate the high gear; after turning on the main switch, the motor**

The battery indicator light is green when it is fully charged, yellow when it is 25%-75%, and red when it is less than 25%)

This tool is designed with a vacuum degree adjustment function. Depending on the point spacing of the module to be maintained, you can adjust the vacuum degree by dialing the

The dynamic vacuum degree regulating valve controls the degree of vacuum according to the size of the vent hole designed in the valve, so that it will not be caused by

The suction force is too large, causing unnecessary damage to small spacing modules.

Note: If it is not used for a long time, please store it after it is fully charged, and charge it regularly to keep the battery fully charged.

Open the main switch, hand the tool handle, and then put the suction cup at the center of the module, tap the touch switch button, gently pull the module out smoothly, the other hand holds the module steady, touch the touch switch button to turn off the motor, then turn off the main switch.**(remark: the motor is defaulted as lower gear, press about 1.5 second to start the higher gear; after open the main switch, if the battery indicator is green means that it is full power status, if yellow means power 25-75% status, if red means power below 25% status.)**

This tool is designed with vacuum adjustment function, depending on the different point spacing of the maintained modules, can pull the vacuum adjustment valve, control the strength of vacuum according to the size of the vent hole of the valve design, it can avoid damaging the

small pitch modules although the suction power is strong.

Remark: if no need use the tool for a long time, please charge before storage, and charging regularly, keep the battery full power state.

Charging instructions:

Charging instruction:

Insert the charger into the socket, plug the DC end into the charging stand, turn on the main switch, and check the charging through the battery indicator light status, after it is fully charged, turn off the main switch and unplug the charger; for emergency use, this tool It supports charging and discharging at the same time, but this function will affect the life of the battery. It is recommended to use it only in emergency situations.

Plug the charger into the socket, DC end insert into the charging stand, open the main switch, check the charge status through the battery indicator, after being fully charged, turn off the main switch, pull out the charger. For emergency use, this tool supports use while charging, but this function has an impact on battery life, suggest to use only in emergency situations.

338580 da hua 2023-08-28

Warranty Policy

Under normal use, the whole machine has a one-year warranty.

1. People who do not use the standard charger, inhale debris, soak in rain or water, fall from high altitude, dismantle tools without permission, etc.

Damage is not covered by the warranty.

2. Tools burned due to unstable charging voltage are not covered by the warranty.

3. Due to changes in the charging environment and frequency of use, there will be a reasonable loss of battery life. Normal

Loss of battery life is not covered by the warranty.

4. There are product QR code identification tags and anti-tear laser tags inside the suction cup. Once the two tags are damaged, the product will be damaged.

The product will no longer be under warranty.

Normal use, the whole machine is guaranteed for one year

1. No warranty of man-made damage like not using the standard charger, inhalation of debris, raining, fall from height, private dis-assembly tool and so on.

2. No warranty of tool burned due to unstable charging voltage.

3. Because of change charging environment and different frequency of use, battery life will reasonable damage, normal battery life damage is not covered by the warranty.

4.The tool has the labels of product QR code identity and anti-tear laser, Once the two labels are damaged, the tool will not be warranted.

Packing configuration table

Package description

Packing configuration details Package details	quantity Quantity	Specification Description	test Inspect
Tool host Tool main engine	1 set One set	350W dual gears 350W double gears	
charger Charger	1P One pcs	Input 100-240V, output 25.2V-1.0A Input100-240V, output25.2V-1.0A	
Backpack backpack	1P One pcs	Black plus shoulder strap Black shoulder strap	
manual Instruction manual	1P One pcs	/	

Packing

Packing way

Shipping method Shipping way	Packing Packing way	Single piece quantity Pcs/Ctn	Carton size Carton size	Single box gross weight GW/Ctn
Single unit shipment single set shipping	Carton+EPE Carton+pearl cotton	1x1P 1*1pcs	27*21.5*21CM (length, width and height 27*21.5*21CM (LWH)	1.55KG
Full box shipment Full carton shipping	Carton+EPE Carton+pearl cotton	1x8P 1*8pcs	55.5*44.5*45CM (length, width and height) 55.5*44.5*45CM (LWH)	13.8KG

338500 dahua 2023-08-28